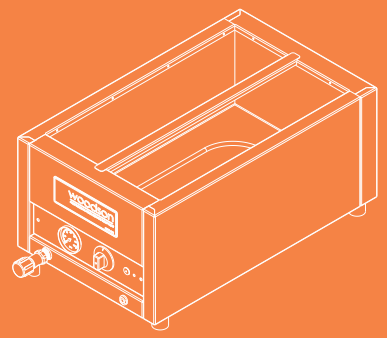

W.BML21
bain maries

woodson®
PROFESSIONAL FOOD SERVICE EQUIPMENT

COUNTERTOP SERIES

APPLICATIONS

- Ideal for holding foods at serving temperature

FEATURES & BENEFITS

- Stainless steel construction in bright enamelled finish
- Wet or dry operation
- Welded tank with large 20mm drain cock
- Full size gastronorm cavity to take choice of 65mm and 150mm pan combinations
- Clear thermometer readout
- Non slip feet

W.BML SPECIFICATIONS

Pan Combination	A	B
Pan Size (with lids)	1/3	1/3
Depth of Pans	100	150
No. of Pans	6	6

Pan Combination	C	D
Pan Size (with lids)	1/2	1/2
Depth of Pans	100	150
No. of Pans	4	4

Pan Combination	R
Pan Size (with lids)	7.25 round
No. of Pans	4

Amps 10	1.5kW	
W 705	D 600	H 290

Dealer:

Cool-to-touch safety feature during operation

Large 20mm drain

W.BML

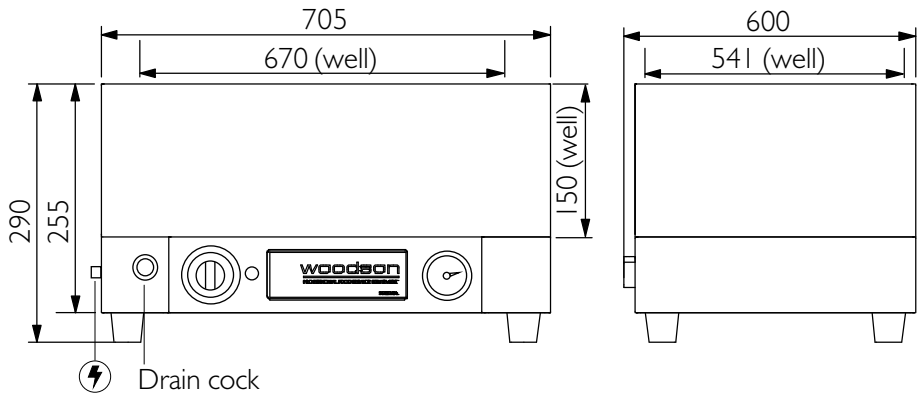

We reserve the right to alter specifications of products without notice

For details of your local dealer, contact:

QLD
Tel: 07 3344 2444
Fax: 07 3345 6403
fse@stoddart.com.au

NSW
Tel: 02 8832 4399
Fax: 02 8832 4355
sydney@stoddart.com.au

VIC & TAS
Tel: 03 9565 4699
Fax: 03 9565 4655
melbourne@stoddart.com.au

WA
Tel: 08 9414 1343
Fax: 08 9414 1361
perth@stoddart.com.au

SA & NT
Tel: 1300 79 1954
adelaide@stoddart.com.au

Manufactured by: Tom Stoddart Pty Ltd, 215 Jackson Road Sunnybank Hills, Qld 4109 Australia

Version 0912