woodson®
PROFESSIONAL FOOD SERVICE EQUIPMENT

large bain marie

MODELS: WBMA22; WBMA23; WBMA24; WBMA25; WBMA26

APPLICATIONS

- Ideal for holding foods at serving temperature

STANDARD FEATURES

- Stainless steel construction in bright anneallled finish
- Wet or dry operation
- Thermostat controls
- Welded tank with large 20mm drain with ball valve
- Full size gastronorm cavity to take choice of 65mm and 100mm pan combinations
- Clear thermometer readout
- Non slip feet
- Supplied with 10 amp plug & lead

OPTIONS

- ½ size pans, 65mm deep (add A to code)
- Trolleys & trolley accessories
- Round pan inserts

WMBA22 - 2 x ½ pans wide, 2 rows			
Kw 1.2	W 705	D 600	H 245
WBMA23 - 3 x ½ pans wide, 2 rows			
Kw 1.8	W 1030	D 600	H 245
WBMA24 - 4 x ½ pans wide, 2 rows			
Kw 2.4	W 1355	D 600	H 245
WBMA25 - 5 x ½ pans wide, 2 rows			
Kw 2.4	W 1680	D 600	H 245
WBMA26 - 6 x ½ pans wide, 2 rows			
Kw 2.4	W 2005	D 600	H 245

Dealer:

Model shown WBMA24

WBMA

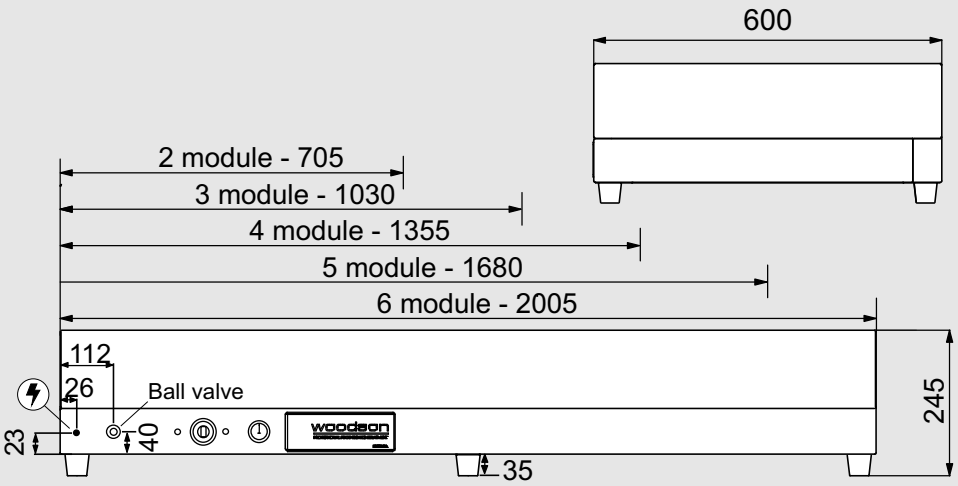

We reserve the right to alter specifications of products without notice

For details of your local dealer contact:

QLD, NT, WA, International	NSW, ACT	VIC, SA, TAS
ph 07 3344 2444 fax 07 3345 6403	ph 02 9817 7700 fax 02 9817 7800	ph 03 9706 5250 fax 03 9706 5290
email fse@stoddart.com.au	email gladesville@stoddart.com.au	email melbourne@stoddart.com.au

Manufactured by: Tom Stoddart Pty Ltd, 215 Jackson Road Sunnybank Hills, Qld 4109 Australia