www.santos.fr

SANTOS®

Ice Crusher

53

This commercial appliance crushes all ice cubes from your ice machine

Fine or coarse crushed ice for cocktail bars, restaurants, night clubs...

Use the standard International ice bucket to make your service easier

53 (Grey model)

Internationally patented models

Delivered with 1 standard ice bucket

Ice crusher # 53

Powerful / Efficient / Reliable

- Heavy duty, high output, commercial ice crusher
- Makes both fine and coarse crushed ice in just one touch of a button.
- Simply and quickly makes 1.2kg (2.7 pounds) of crushed ice in 30 seconds.
- Ideal for frozen margaritas or daiquiris and to serve food on a bed of ice.
- Electronic control unit with 2 operating systems (manual or automatic timer)

Top cover

High capacity ice cubes tank
1.2 kg of ice cubes
(2.7 pounds - standard bucket)

Heavy duty and quiet asynchronous motor.
Single phase :
100-120 V - 50/60 Hz - 155 W
220-240 V - 50/60 Hz - 130 W

Heavy duty ABS casing

Non-slip rubber feet for high stability

ergonomic handle

Front panel. Easy to use (electronic control unit)

Choose coarse or fine ice, crushed in just one touch of the button :
- Manual
- Automatic

Standard ice bucket
190 x 190 x 165 mm
7.5 x 7.5 x 6.5 inches

Removable drip tray

Grey

Red

Blue

Yellow

Easy to use

- For the standard ice bucket into the tank.
- Put the ice bucket in the under position.
- Push button to make fine or coarse crushed ice.

Technical specifications

Motor		
Single phase	100-120V - 50/60 Hz - 155 W 220-240V - 50/60 Hz - 130 W	
Speed	89 RPM (60 Hz) 73 RPM (50 Hz)	
Weight	Net weight	10 Kg (22 lbs)
	Packed	11 Kg (24 lbs)
Dimensions	**Appliance**	**Packed (box)**
Height	474 mm (19")	520 mm (20.5")
Width	236 mm (8")	375 mm (14.7")
Depth	353 mm (12")	415 mm (16.3")
Shipping cube		0.080 m³ (2.7 ft³)

Safety - Standards - Hygiene

This appliance has been designed to comply with the most strict international safety and hygiene regulations in conformity with the standards, especially :

- Machinery directive 98/37/EC
- Electromagnetic compatibility 89/336/EEC
- Electrical equipment designed for use within certain voltage limits "low voltage" 73/23/ECC
- Harmonized European standards EN 292-1 et 2 ---- EN 60204-1 : 1998
- CE European standards
- GS (Germany) controlled by LNE laboratory
- UL (USA & Canada) (Pending)
- NSF (USA) (Pending)

Electrical safety

Waterproof ECU (electronic control unit). Overload safety
All mechanical parts are ground (earth) connected
every equipment is perfectly controlled after assembly (special electrical testing bay)

Thermal safety

Motor protected by internal thermal detector.

Acoustic safety

The asynchronous motor is particularly silent

Hygiene

All removable parts can be put in a dishwasher or easily cleaned with hot soapy water.

Technical characteristics can be modified by the manufacturer without notice.

Ice crusher # 53

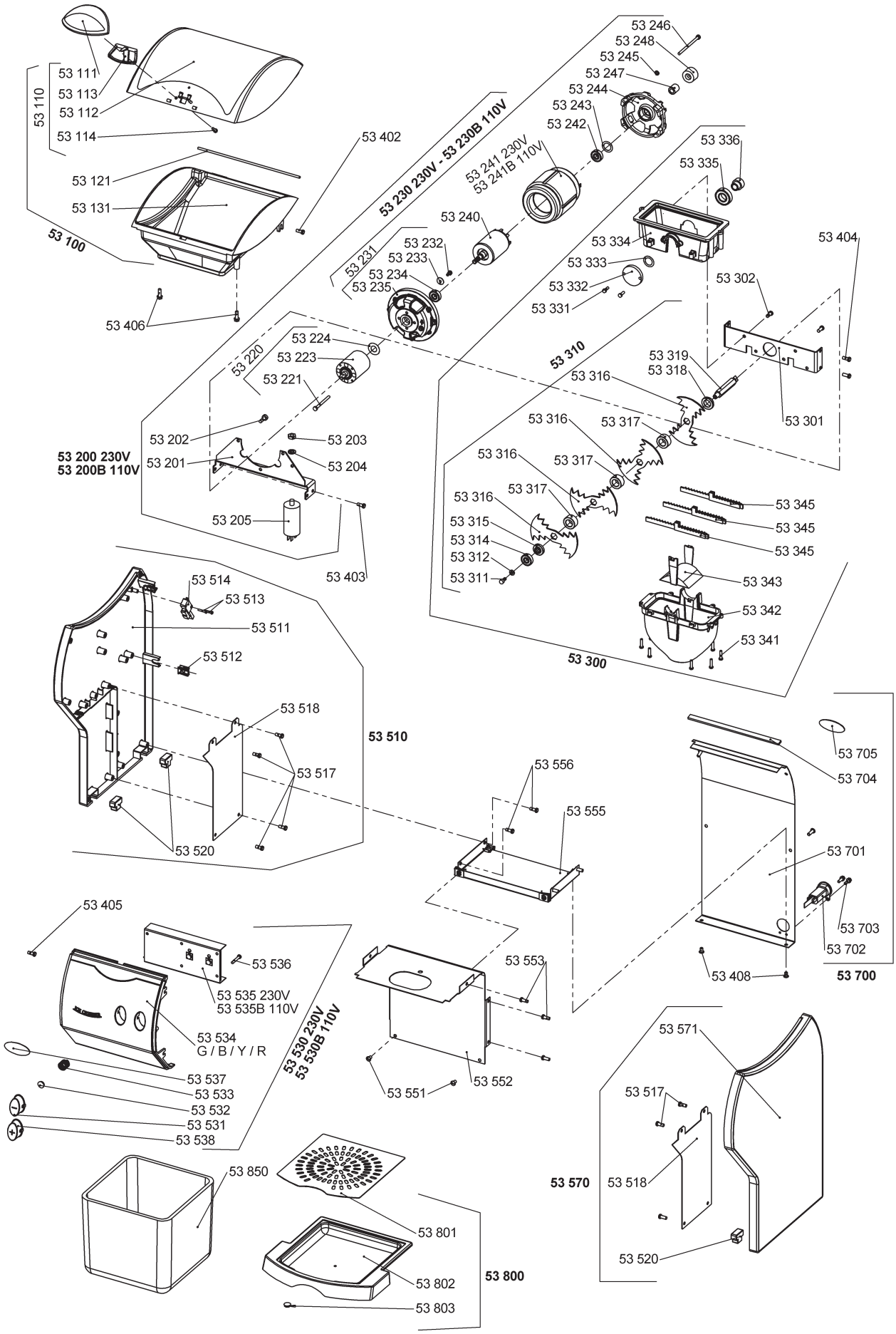

140 - 150 AV. ROGER SALENGRO - 69120 - VAULX EN VELIN - LYON - FRANCE - TEL. 33 (0) 472 37 35 29 - FAX 33 (0) 478 26 58 21
Web site : www.santos.fr Email : santos@santos.fr

Imprim'éole 02/05 - V3