SANTOS SAS
140-150 AVENUE ROGER SALENGRO
69120 VAULX-EN-VELIN (LYON) - FRANCE
PHONE 33 (0) 472 37 35 29 - FAX 33 (0) 478 26 58 21
FAX 33 (0) 478 26 58 21
E-Mail :santos@santos.fr www.santos.fr

ICE CRUSHER N°53

USER AND MAINTENANCE MANUAL

IMPORTANT: documents included in this manual to be kept:

- **"CE" COMPLIANCE DECLARATION**
- **WARRANTY CERTIFICATE**

Coffee grinders - Fruit juicers - Mixers - Blenders - Drinks dispensers - Planetary mixers
Cheese graters - Ice crushers - Mincers - Vegetable slicers – Dough mixer
Moulins à café - Presse-fruits - Mixers - Blenders - Distributeurs de boissons - Batteurs mélangeurs - Pétrin - Râpes à fromage - Broyeurs à glaçons - Hache-viande - Coupe-légumes

MODELES DEPOSES FRANCE ET INTERNATIONAL
INTERNATIONALLY PATENTED MODELS

ENG

CONTENTS

"CE" COMPLIANCE DECLARATION **4**

FOR THE ICE CRUSHER N° 53 ..... **5**

RECYCLING THE PRODUCT AT THE END OF ITS SERVICE LIFE *5*

WARNING *5*

INSTALLATION AND HANDLING *6*

ELECTRICAL CONNECTION *6*

USING THE APPLIANCE **7**

USING FOR THE 1st TIME *7*

START-UP: *7*

Assembly and preparation 7

USING *7*

HOW TO STOP THE MACHINE *7*

CHOOSING THE SIZE OF CRUSHED ICE *7*

USING THE MANUAL OR AUTOMATIC MODE *8*

Manual mode 8

Automatic mode 8

CLEANING *8*

SAFETY / MAINTENANCE **9**

MOTOR OVERLOAD SAFETY FEATURE: *9*

MOTOR OVERHEATING SAFETY FEATURE *9*

SAFE ACCESS TO THE TOOLS *9*

MAINTENANCE *10*

Spare parts 10

FAULT FINDING **11**

The appliance does not start 11

The machine stops because the motor has overheated: (the motor unit is hot) 11

The appliance stops further to an overload 11

The appliance continues to operate after processing all the ice cubes 11

Both buttons flash simultaneously 11

The crushed ice does not drop into the ice bucket 12

TECHNICAL SPECIFICATIONS **13**

Electrical wiring diagram 100-120V~ 50/60Hz and 220-240V~ 50/60Hz *14*

Element cross-reference table *15*

Figures.....16

WARRANTY CERTIFICATE.....18

APPLIANCE IDENTIFICATION PLATE.....18

ENG

"CE" COMPLIANCE DECLARATION

THE MANUFACTURER:

SANTOS SAS - 140-150, Av. Roger SALENGRO 69120 VAULX-EN-VELIN (LYON) FRANCE

HEREBY DECLARES THAT THE MACHINE DESIGNATED ON THE IDENTIFICATION PLATE AFFIXED:

- UNDER THE APPLIANCE,
- ON THE WARRANTY CERTIFICATE ON THE LAST PAGE OF THIS MANUAL,

COMPLIES WITH THE PROVISIONS OF THE "machines" DIRECTIVE AS MODIFIED (Directive 98/37/CEI)
AND THE NATIONAL LEGISLATION TRANSPOSING IT.

IT ALSO COMPLIES WITH THE PROVISIONS OF THE FOLLOWING EUROPEAN DIRECTIVES:

No. 73/23 dated 19/02/73 (Low voltage directive)
No. 89/336 (CEM directive)
No. 2002/95/CE (RoHS directive)
No. 2002/96/CE (WEEE directive)

The machine complies with the provisions of the following harmonised European standards:

EN ISO 12100 -1 and 2 : 2004 - Machine safety devices - General design principles
NF EN 60204-1: 2006 - Machine safety devices - Machine electrical equipment - General regulations
NF EN 60335-1 : 2003 - Safety of household and similar electrical appliances

SIGNED IN VAULX-EN-VELIN ON: **01/04/2007**

SIGNATORY'S TITLE: **CHIEF EXECUTIVE OFFICER**

SIGNATORY'S NAME: **JACQUES FOUQUET**

SIGNATURE

ENG

FOR THE ICE CRUSHER N° 53

- Ice crusher N° 53 is designed especially for bars, cafés, hotels, restaurants and nightclubs.
- The appliance comprises a plastic crushing unit fitted with stainless steel blades, a 1.3 kg see-through plastic hopper and a standard ice bucket.
- The appliance crushes ice cubes (square or cylindrical) from conventional ice cube makers.
- It is fitted with a planetary reduction gear and asynchronous motor pilot controlled by an electronic board.
- It allows for 2 sizes of crushed ice to be made.

ATTENTION:

For all handling operations including unpacking the machine, do not handle or lift the appliance by the locking handle (2) of the cover (1) (fig. A).

ATTENTION: Make sure that the cover **(1)** is in the closed position before plugging the power cable **(10)** into the mains supply socket (fig. B).

RECYCLING THE PRODUCT AT THE END OF ITS SERVICE LIFE

This equipment is marked with the selective sorting symbol relating to wastes from electrical and electronic equipment. It signifies that this product should be taken over by a selective collection system conforming to the Guideline 2002/96/EC (WEEE) – part Professional Equipment – so that it can be either recycled or dismantled in order to reduce any impact on the environment.

For more information, please contact your Retailer or the SANTOS.

For eliminating or recycling components of equipment, please contact a specialized company or contact SANTOS.

The electronic products not undergoing a selective sorting are potentially dangerous for the environment.

The damaging materials should be eliminated or recycled according to the regulations in force.

WARNING

1. **Do not use this appliance to crush anything other than square or cylindrical ice cubes not exceeding 30x30x30 mm in size.**
2. **Do not use this appliance to crush frozen foods.**
3. **No not insert objects into the crushed ice outlet opening (9).**

ENG

INSTALLATION AND HANDLING

The machine can be handled by a single person. It is recommended that the appliance be placed on a table or worktop for more comfortable use with the controls facing you (recommended height: 90 cm, to be adapted as required for the user).

Note: In order to understand the following paragraphs better, you are asked to refer to the diagrams at the end of this manual

ELECTRICAL CONNECTION

- The electric power supply for the appliance is available in 2 single-phase voltages:
  - 100-120V~ 50/60 Hz : 53V1
  - 220-240V~ 50/60 Hz : 53

Line protection: the machine should be connected to a standard 2-pole + earth electric socket. The set-up must be fitted with a differential circuit breaker and a 16A fuse. **The appliance must be earthed** (fig. B).

CARE:

- Before connecting the machine, check that the mains electrical voltage is the same as the voltage for your appliance. Its value is shown:
  - either on the identification plate (**16**) under the machine.
  - or on the identification plate on the last page of this manual.
- If the power cable (**10**) is damaged, it should be replaced by a special assembly available from approved SANTOS dealers or from SANTOS.

ENG

USING THE APPLIANCE

USING FOR THE 1st TIME

Carefully clean the parts of the machine in contact with the ice cubes (fig. A).

- Grip the handle of the cover (**2**) to unlock it, then lift it up to gain access to the ice cube hopper (**3**). Clean the cover (**1**), hopper (**3**), ice bucket (**6**) with a non-abrasive sponge and standard washing up liquid.

START-UP:

Assembly and preparation

(fig. A)

1. **Place the drip tray (8) and its holder (7)** under the crushing unit (**9**).

USING

1. Switch on the appliance by plugging in the power cable (**10**).
2. Fill the ice bucket (**6**) with blocks of ice (*see* ***warning paragraph***)
3. Pour the contents of the ice bucket into the ice cube hopper (**3**) (fig. C)
4. Close and lock the cover (**1**) of the hopper.
5. Place the ice bucket (without its cover) on the drip tray (**8**) (fig. D).
6. Press the button corresponding to the size of crushed ice required.

   The **left-hand button** (**5**) is provided to obtain **small-sized** crushed ice.
   The **right-hand button** (**4**) is provided to obtain **big-sized** crushed ice.

7. (The crushed ice falls into the ice bucket) (fig. E).

HOW TO STOP THE MACHINE

The appliance is stopped either by:

1. pressing the button corresponding to the size of crushed ice being made "button lit up" (**4 or 5**),
2. opening up the cover (**1**).
3. or unplugging the power cable plug (**10**)

CHOOSING THE SIZE OF CRUSHED ICE

The appliance does not require any adjustment.

The **left-hand button** (**5**) is provided to obtain **small-sized** crushed ice.
The **right-hand button** (**4**) is provided to obtain **big-sized** crushed ice.

ENG

USING THE MANUAL OR AUTOMATIC MODE

Manual mode

Prolonged pressing of one of the **buttons** (**4 or 5**) starts up the **manual mode**. The motor runs for as long as the push button is pressed then stops as soon as it is released.

Automatic mode

Brief pressing of one of the **buttons** (**4 or 5**) starts up the **automatic mode**. The motor runs for a set programmed time (1 minute) then stops.
Note: the timer cannot be adjusted. The preset time corresponds to complete crushing of the 1.3 kg of ice (maximum hopper capacity).

During the automatic cycle, **briefly pressing** of the button for the **size** of crushed ice in progress (button lit up) will stop the appliance (timer initialization).

During the automatic cycle, **briefly pressing** of the button for the **other size** of crushed ice in progress (button NOT lit up) will change the crushed ice size without initializing the timer.

Opening the cover (1) during the automatic cycle will stop the motor.
Closing the cover (**1**) will start the motor back up. The cycle resumes where it was as soon as the cover is closed (timer not initialized on opening/closing of cover).

CLEANING

IMPORTANT:

- **In every case, the machine should be stopped and the machine's power cable (10) unplugged.**
- **Cleaning with a water spray or pressure spray is not permitted**

ENG

SAFETY / MAINTENANCE

MOTOR OVERLOAD SAFETY FEATURE:

If the motor gets blocked (foreign or hard matter), the appliance will perform 2 successive blade rotation direction changes to make it easier for the hard matter to go through. The appliance will then resume its normal cycle. If the 2 direction changes are not enough to overcome this problem, the appliance will then go into the safety state and the motor will stop.
The safety state is signaled by simultaneously flashing of both push buttons (**4**) and (**5**).

In this case: To overcome the fault: remove the foreign matter from the crushing unit, then initialize the appliance (hold the 2 push buttons (**4**) and (**5**) down for 2 seconds).

If the problem persists, switch off the power supply to the machine (unplug the power cord (**10**) from the mains socket) and call in the maintenance service or contact a SANTOS approved dealer.

MOTOR OVERHEATING SAFETY FEATURE

In the event of the motor overheating, the appliance stops automatically.
The protection device is reset automatically, wait for the motor to cool down (15 to 30 seconds) before starting the machine back up.

If the problem persists, switch off the power supply to the machine (unplug the power cord (**10**) from the mains socket) and call in the maintenance service or contact a SANTOS approved dealer.

SAFE ACCESS TO THE TOOLS

The appliance can only be started up if the cover (**1**) is closed.

- Opening the cover (**1**) will stop the machine and the moving parts.
  The machine is started back up as soon as the cover is closed (**1**).
- A cut in the mains power supply will stop the machine.
  One of the two push buttons (**4**) or (**5**) must be pressed in order to start the machine back up.

For safety reasons, do not place your finger or part of your hand into the crushed ice outlet opening, even if it is blocked up by a clump of crushed ice. In this case, refer to the **"Fault finding"** section.

ENG

MAINTENANCE

Before carrying out any work on the appliance, it is essential to unplug it from the mains and to discharge the motor starting capacitor:

Spare parts

IMPORTANT: Use of spare parts other than certified original SANTOS parts is prohibited.

This machine requires no particular maintenance because the bearings are lubricated for life.
If work is required to replace worn parts such as the crushing blades, electrical or other components, refer to the parts list (see exploded view at the end of the manual).

Please quote the following when **ordering spare parts** (see references in the exploded view at the end of this manual):

- **type**
- **appliance's serial number**
- **electrical characteristics** (16)

given underneath the appliance.

ENG

FAULT FINDING

Carefully determine the reason for the appliance stopping.
In all circumstances, if the problem persists, switch off the appliance (unplug the mains power cord plug (**10**)) and call on someone from the maintenance department or contact an approved SANTOS dealer.

The appliance does not start

- Check: the mains power supply and the condition of the power cable (**10**).
- Check that the luminous indicator lamp at the outlet of the crushing unit (**9**) goes on for approximately ten seconds when the appliance is connected to the mains power supply.
- Check that there is no foreign matter stuck between the blades.
- Inside the appliance, check the condition of the electric wires and connections (at the grommet (**12**) and the connection block (**13**) (fig. F)
- Check the electrical components by changing them one at a time (capacitor, cover safety device, electronic module, motor).

The machine stops because the motor has overheated: (the motor unit is hot)

In the event of the motor overheating, the appliance will stop automatically.
The protection device is reset automatically, wait for the motor to cool down (15 to 30 seconds) before starting the machine back up.

The appliance stops further to an overload

Foreign matter between the blades and intensive use can lead to motor overload.
Under these circumstances, either the thermal protection or the excess current protection may be activated and stop the machine operating.
If the machine is hot, refer to the section ***"The machine stops because the motor has overheated"***.
If not, refer to the ***"motor overload safety feature"*** section.

The appliance continues to operate after processing all the ice cubes

In automatic mode, the appliance operates according to a non-adjustable timer set to 1 minute (time required to process a whole hopper load on small size).
Press the button which is lit up in order to go back to manual mode and stop the appliance.

Both buttons flash simultaneously

The appliance stops further to a motor overload. To overcome this, refer to the ***"motor overload safety feature"*** section.

The crushed ice does not drop into the ice bucket

The appliance is designed to crush the whole capacity of a standard ice cube tray in one go. If too many ice cubes are loaded into the hopper or if an ice bucket which is too small is used, the crushed ice level gradually builds up to the outlet opening. As the crushed ice cannot fall down, it is compacted in the crushing unit. Just removing the ice bucket will not be enough to unblock the crushed ice outlet opening.

IMPORTANT:
No not insert hard objects into the crushed ice outlet opening when the appliance is in operation.

Solution:

- Stop the appliance.
- Empty the ice bucket (filled with crushed ice)
- Fill the ice cube hopper and start the automatic cycle of each size back up again.
- Wait a few moments for the ice to melt if required.

ENG

TECHNICAL SPECIFICATIONS

Model 53		Single phase	
Supply voltage	(V~)	220-240	100-120
Frequency	(Hz)	50/60	50/60
Motor: Rating			
Power input	(W)	130	155
Motor speed:	(rpm)	1450 to 50Hz	1700 to 60Hz
Blade speed:	(rpm)	75 to 50Hz	88 to 60Hz
Ice cube hopper working capacity	(kg)	1.3	
Number of mobile blades		4	
Number of fixed blades		3	
Mean output in "small size"	(kg/h)	180	
Mean output in "big size"	(kg/h)	110	
Timer time	(s)	60	
Ice bucket working capacity	(kg)	1.3	
Dimensions: Height	(mm)	474	
Width	(mm)	236	
Depth	(mm)	353	
Weight: Net weight	(kg)	10	
Weight including packing	(kg)	11	
Noise: (2)	(dBA)	63	

(1) These ratings are provided as a rough guide. The exact electrical specifications can be found on the rating plate.

(2) Noise level measured with sound pressure appliance in operation 1 m from its centerline in accordance with standard EN 31201.

ENG

Electrical wiring diagram 100-120V~ 50/60Hz and 220-240V~ 50/60Hz

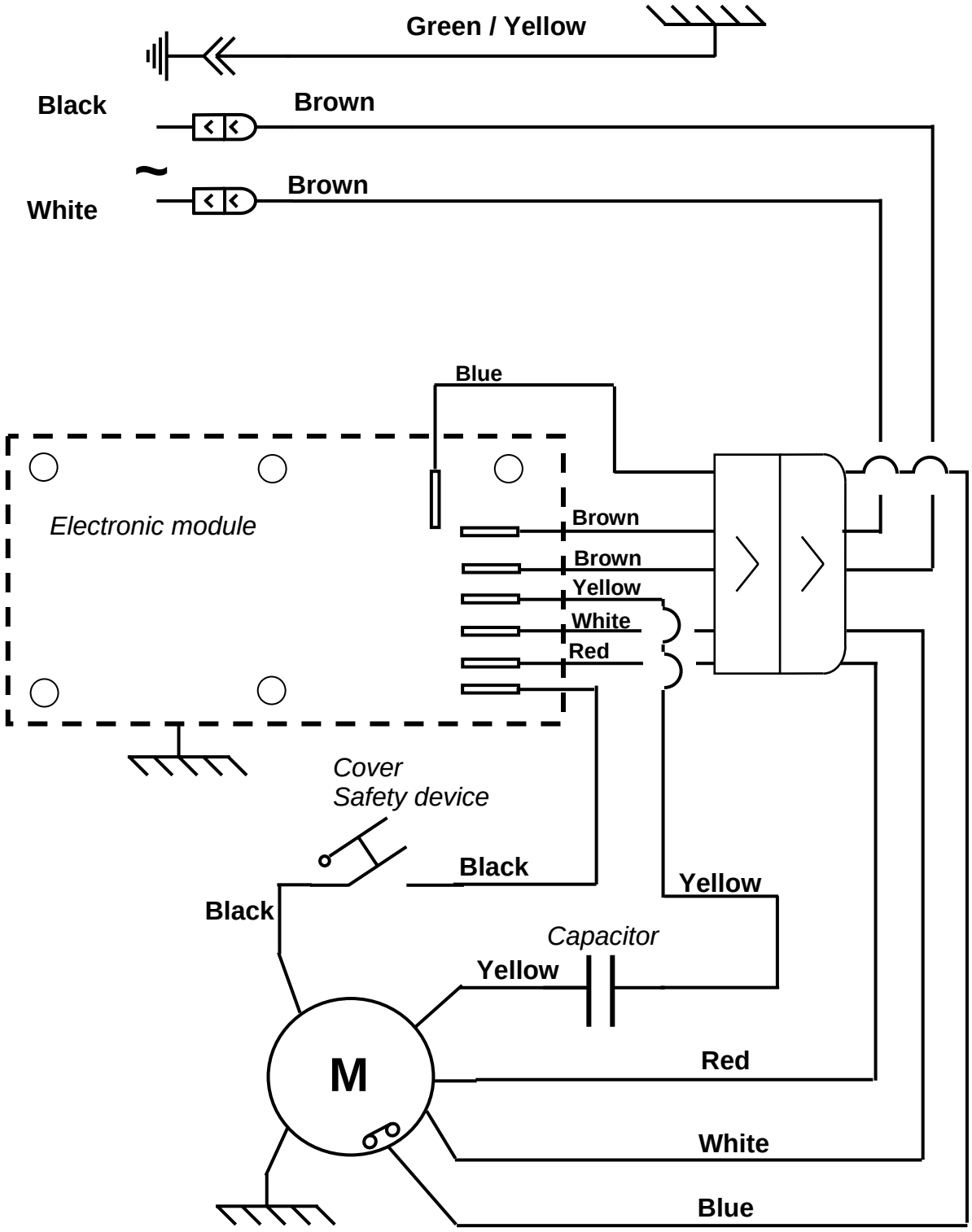

Element cross-reference table

ITEM	Description
1	Ice cube hopper cover
2	Locking handle
3	Ice cube hopper
4	"Big size" button
5	"Small size" button
6	Ice bucket
7	Drip tray holder
8	Drip tray
9	Crushing unit
10	Power cable plug
11	Capacitor
16	Identification plate

ENG

Figures

Fig. A

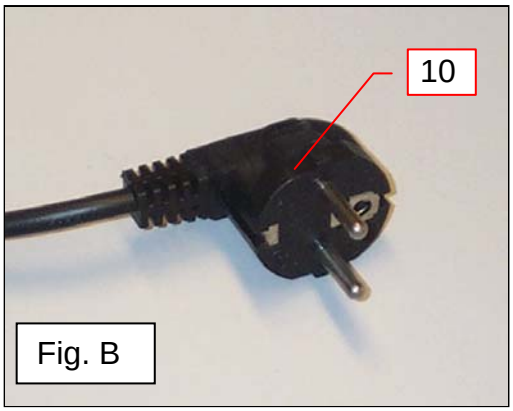

Fig. B

Fig. C

ENG

Fig. D

Fig. F

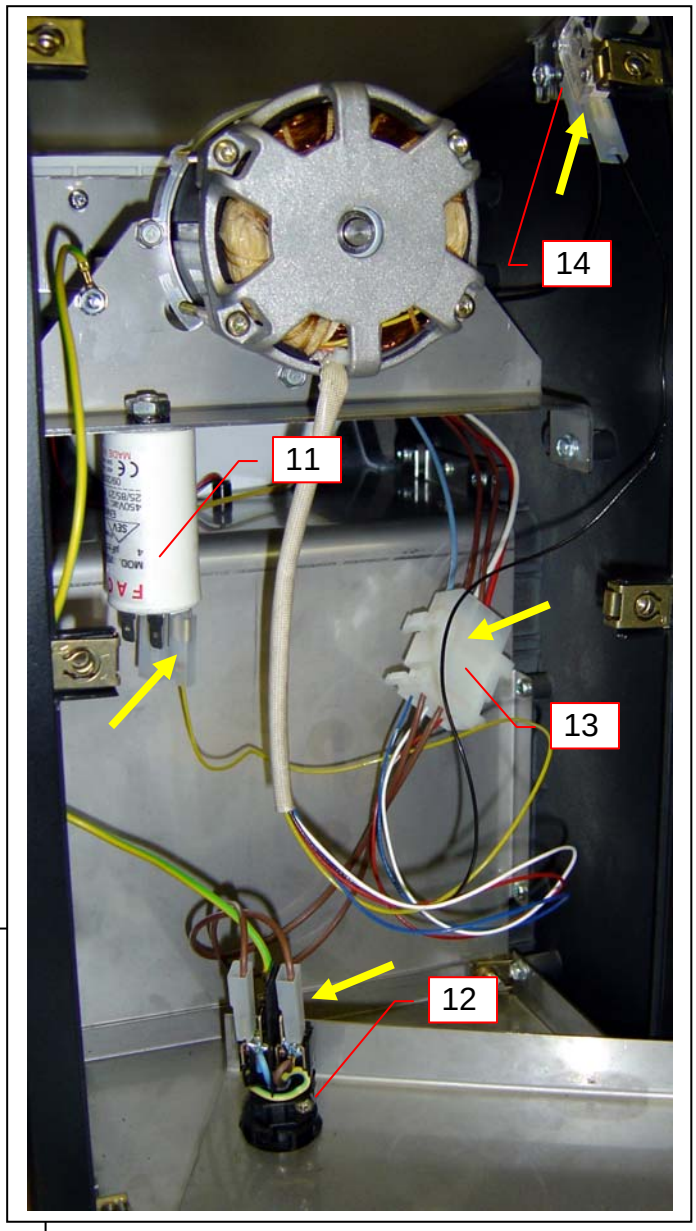

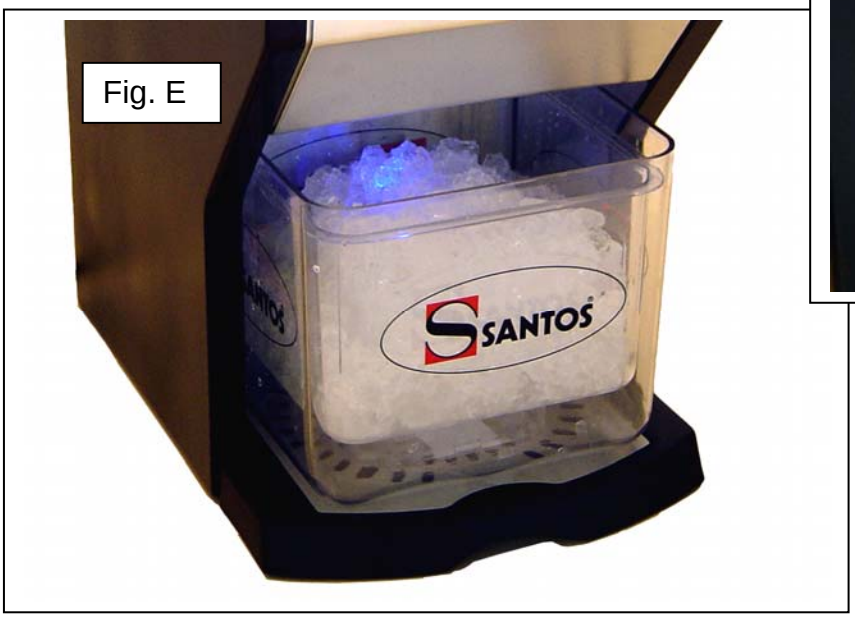

Fig. E

ENG

WARRANTY CERTIFICATE

WARRANTY

This appliance is guaranteed for twelve months from the date of manufacture appearing on the identification plate.
The guarantee is strictly limited to the free replacement of any original part acknowledged by us as being defective as a result of a fault or a manufacturing defect and identified as belonging to the appliance in question.
It does nor apply to damage resulting from an installation or use which does not comply with the instructions supplied with each appliance (user manual) or in the event of an obvious lack of maintenance or non-observance of basic electrical safety rules.
All part replacements under warranty are made after return of the defective part to our workshops carriage paid, accompanied by a copy of this warranty certificate on which the serial number of the appliance is shown.
All appliances have an identification plate bearing a serial number identical to that on this warranty certificate.
In the event of serious damage which is deemed only to be repairable in our workshops, and after agreement from our services, all appliances under warranty are to be dispatched by the client carriage paid. If the appliance is repaired outside the warranty, the forwarding and return transport is the responsibility of the client. Parts and labour are invoiced at the prices in force (spare parts price - hourly labour cost). All repairs will be subject to a prior estimate which should be agreed before repair.
In the event of a dispute, the Courts for the manufacturer's area (Lyon) alone have jurisdiction.

APPLIANCE IDENTIFICATION PLATE

SPECIMEN
For all documents not supplied with the appliance.

Printed, Faxed and Downloaded