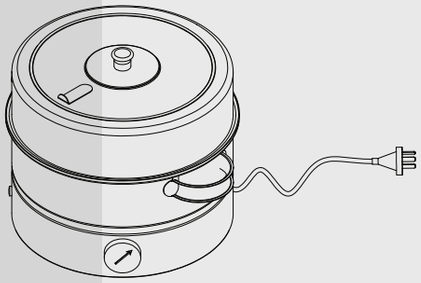

Food Steamers
(FS1)

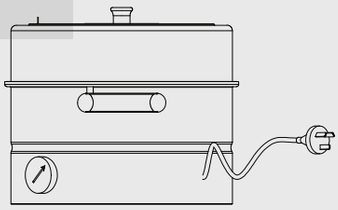

High quality highly polished stainless steel

Easy clean flush mount element

Thermostat control

Indicator Light

2400 watt 240 volt 10amps

Includes hygienic stainless steel wire mesh basket

Purchase of extension (FS3) and 2nd basket (FS4) will allow two tier steaming
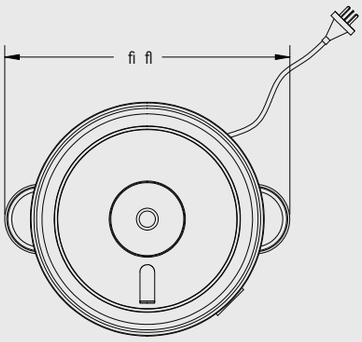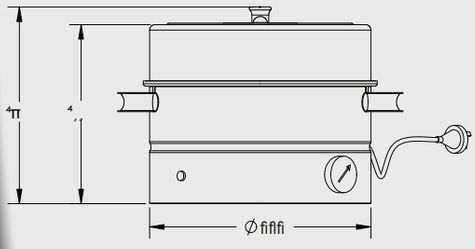
Non electric Food Steamer also available (FS2)