Culinaire

Soak Sink - Mobile

Type 1 – 600 x 600 Square

General Description:

The Culinaire® Soak Sink from Stoddart Manufacturing is easy to push and manoeuvre. The Soak Sink is entirely made of stainless watertight construction with a ball valve fitted to the waste. This product is suitable for the soaking of cutlery and crockery, a 500mm x 500mm dishwasher basket fits perfectly inside the sink.

The Culinaire® Soak Sink is designed to be easy to operate and maintain whilst attention to detail is focused on providing optimum hygiene and safety

Models:

Code: CD.SSM.T1.*d.h*

Code explanation:

CD	= Culinaire Dish Handling
SSM	= Soak Sink Mobile
T1	= Type 1 – 600mm x 600mm Square
d	= Depth of Bowl

Standard Depths of Bowls – 125mm, 300mm & 500mm

h	= Overall Height

Standard Height of Soak Sink – 550mm & 750mm

e.g.: for specification and ordering

Culinaire: **CD.SSM.T1.125.550**

Features and Benefits:

- 100% 304 grade stainless steel construction
- 25mm radius internal corners to stainless steel sink prevent bacteria growth in sharp corners, easy to clean
- 50mm stainless steel ball valve enables easy draining
- Sturdy 25mm stainless steel square tube legs
- Easy-push 125mm swivel castors – two with brakes

Due to continuous product research and development, the information contained herein is subject to change without notice

Tel: 1300 791 954 Web: www.stoddart.com.au Email: fse@stoddart.com.au

Specification:

Construction:

- 304 grade 1.5mm stainless steel in No.4 satin finish
- 50mm Ball Valve to waste
- 25 x 25 x 1.2mm stainless steel square tube legs
- 125mm swivel castors, two with brakes

Product Details:

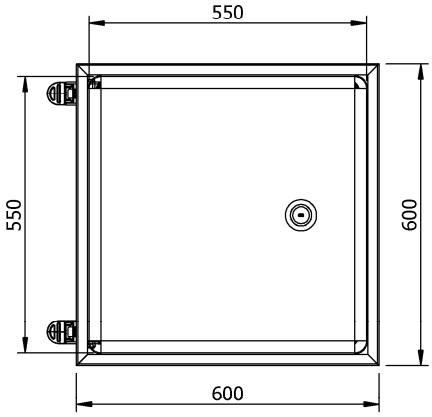

Plan View

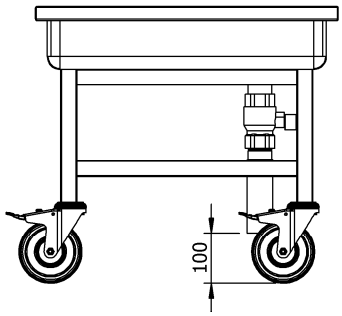

Front Elevation

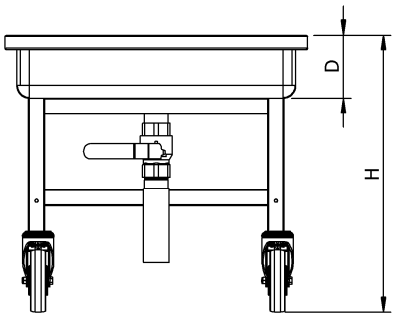

Side Elevation

Culinaire
food service equipment

Due to continuous product research and development, the information contained herein is subject to change without notice