Culinaire

Soak Sink - Mobile

Assisted Lift

General Description:

The Culinaire® Soak Sink with Assisted Lift from Stoddart Manufacturing is easy to operate with a simple foot operated mechanism. The Soak Sink is entirely made of 316stainless steel with a ball valve fitted to the waste. This product is suitable for the soaking of cutlery and crockery. The soak sink is designed to operate with either a single or two 500mm x 500mm dishwasher baskets. The foot operated assisted lift improves workers comfort by setting the basket at the correct working height.

The Culinaire® Soak Sink is designed to be easy to operate and maintain, design detail is focussed on OH&S operation, reduction of twisting & turning associated with positioning full racks on dish washer entry.

Models:

Code: CD.SSM.AL.300.900

Code explanation:

CD	= Culinaire Dish Handling
SSM	= Soak Sink Mobile
AL	= Assisted Lift
300	= 300mm Deep of Sink
900	= 900mm High

e.g.: for specification and ordering

Culinaire: **CD.SSM.AL.300.900**

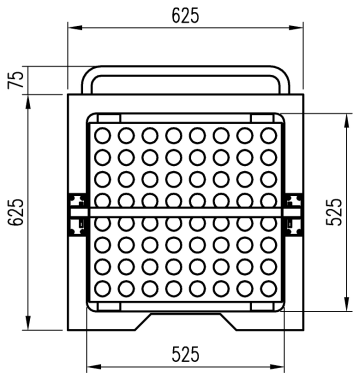

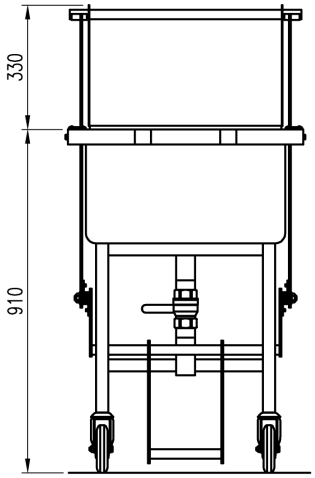

Front Elevation

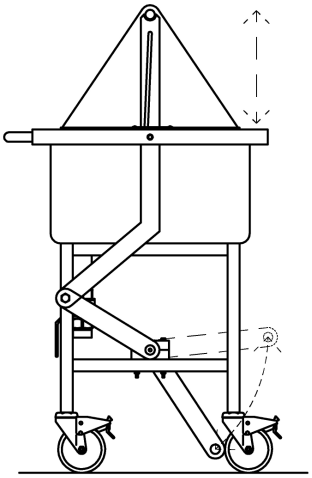

Foot Control

Side Elevation

Stepping on the foot control will raise the basket to a comfortable working height.

Specification:

Construction:

- 316 grade 1.5mm stainless steel in No.4 satin finish
- 50mm Ball Valve to waste
- 25 x 25 x 1.2mm stainless steel square tube legs
- 125mm swivel castors with brakes

Culinaire
food service equipment

Due to continuous product research and development, the information contained herein is subject to change without notice

Tel: 1300 791 954 Web: www.stoddart.com.au Email: fse@stoddart.com.au