ESWOOD
PROUDLY AUSTRALIAN MADE

ES25
ES32

Pass-Through Recirculating Dishwashers

- ES25 - 1 Phase - 540 pieces per hour
- High Capacity ES32 - 3 Phase - 700 pieces per hour
- Rinse pump fitted as standard
- Durable stainless steel wash arms
- Automatic fill to wash and rinse tanks
- Fully automatic cycle starts when the door is closed
- Easy to use electro mechanical controls
- Accurate digital temperature displays
- Suitable for corner or inline installation

FEATURES	BENEFITS
EASILY REMOVABLE SPRAY ARMS AND FILTERS	REDUCED CONTAMINATION OF WASH WATER WITH SOIL GIVES LOW DETERGENT CONSUMPTION
ELECTRICAL CONNECTION POINTS FOR DETERGENT AND RINSE AID SYSTEMS	ASSISTS DETERGENT COMPANY TO MAKE CORRECT INSTALLATION OF DETERGENT SYSTEMS
MACHINE STARTS UPON CLOSURE OF HOOD	FULLY AUTOMATIC FOR EASY OPERATION
RINSE PUMP FITTED AS STANDARD	ENSURES CORRECT SANITISATION WITH CONTROLLED WATER USAGE
ALL STAINLESS STEEL CONSTRUCTION	ENSURES RIGIDITY AND DURABILITY
OPERATION INTERLOCKED TO RINSE TEMPERATURE	MEETS ANZFA SAFE FOOD CODE AND HACCP REQUIREMENTS

HACCP AUSTRALIA FOOD SAFETY PROGRAMME CERTIFICATION

" The *ONLY* HACCP approved Warewashing made in Australia for your protection "

Type Tested

WaterMark

ESWOOD 10-6-2-1 GUARANTEE

- 10 YEARS GUARANTEE OF PARTS AVAILABILITY
- 6 YEARS WARRANTY ON STAINLESS BODY
- 2 YEARS WARRANTY ON WASH PUMP
- 1 YEAR WARRANTY ON PARTS & LABOUR

serving those who serve the best for 100 YEARS 1911 - 2011

1800 013 123

goldsteineswood.com.au

ESWOOD
PROUDLY AUSTRALIAN MADE

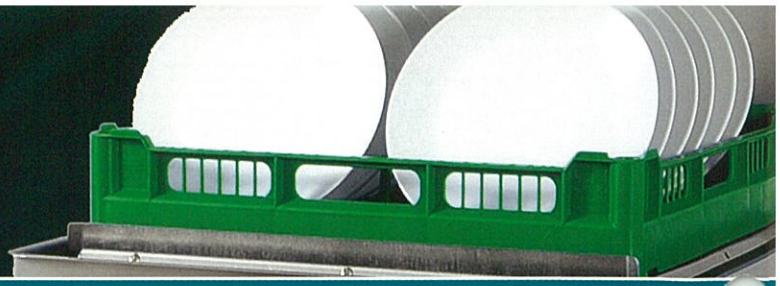

ES25 & ES32 Pass-Through Recirculating Dishwashers

goldsteineswood.com.au

500 x 500 Racks

Economical & Efficient Performance:
The Eswood ES25 and ES32 pass-through dishwashing machines provide excellent performance of up to 540 and 700 pieces per hour. These models will wash all types of crockery, cutlery and glassware and accept standard 500 x 500mm racks. A generous opening height of 340mm caters for bulky kitchen utensils.

Ergonomically Designed:
Bench height pass-through operation eliminates the need for operators to bend over during loading and unloading, ensuring greater efficiency, safety and convenience.

In-line or Corner Feed:
ES25 and ES32 machines can be installed for in-line or corner feed, making the most of your space and working preferences. Loaded racks slide easily from an adjacent feeder bench into the wash chamber and out again after washing.

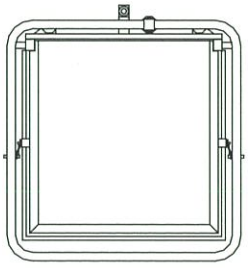

TOP VIEW

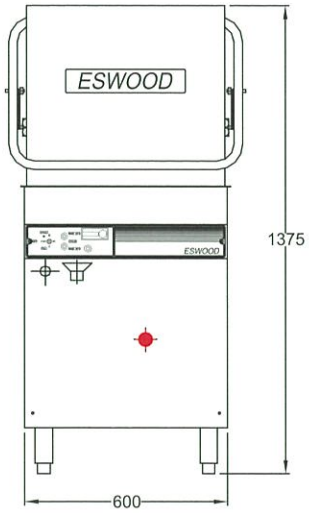

FRONT VIEW

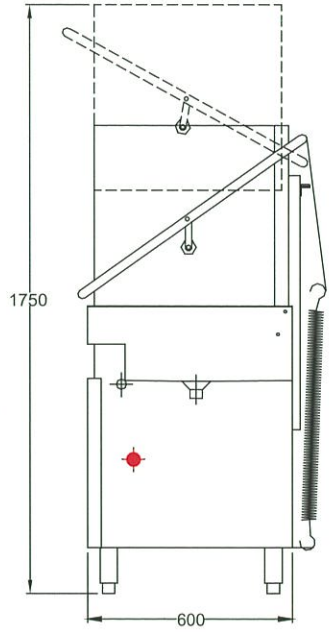

SIDE VIEW

- Drain 2" BSP Gravity.
- Hot water supply 1/2" BSP.
- Electrical Connection.

Fully Automatic Operation:
Just slide the loaded rack in, cycle starts automatically when the hood is closed and stops automatically if hood is opened at any time.

Powerful Wash System:
Powerful wash and rinse action from high volume pump and upper and lower spray arms. Independent wash and rinse systems ensure high wash quality and hygiene.

Built-in Water Booster Heaters:
Booster heaters with low water safety cut out and thermostatic control ensure correct water temperature and level is maintained for safe hygiene and continuous use. Wash and rinse tanks have convenient automatic fill.

Quality Stainless Steel Construction:
Manufactured to Eswood's high quality standards from stainless steel, non-ferrous and durable synthetic materials for reliable operation. Filter and spray arms easily removable for cleaning. All Eswood's products are fully guaranteed and backed by our national support network.

MODEL: ES25 Specifications:

Dimensions (WxDxH):	600 x 600 x 1375 mm
Height with door open:	1750 mm
Rack Size (WxD):	500 x 500 mm
Weight:	103 kg
Electric Connection:	15A Single Phase - 240V
Rating:	3.5 kW
Water Supply:	70°C / 2-4 bar (28-56 psi)
Packed:	0.5 m³
Meal Service:	30 - 60 pax (25 racks/hr)
Wash Cycle:	120 sec
Water Consumption:	3.5L cycle
Tank Capacity:	30L

Includes:
1 x plate rack, 1 x cup rack, 1 x cutlery container

MODEL: ES32 Specifications:

Dimensions (WxDxH):	600 x 600 x 1375 mm
Height with door open:	1750 mm
Rack Size - NK (WxD):	500 x 500 mm
Weight:	103 kg
Electric Connection:	3 Phase - 415V + N
Rating:	9.5 kW
Water Supply:	60°C / 1-4 bar (15-56 psi)
Packed:	0.5 m³
Meal Service:	60 - 130 pax (32 rack/hr)
Wash Cycle:	85 sec 115 sec
Water Consumption:	3.5L cycle
Tank Capacity:	30L

Includes:
2 x plate racks, 1 x cup rack, 1 x cutlery container

Options

Insulated hood: Reduces noise & saves energy.
ES32G: Pass-through glass washer, uses 500 x 500 racks for large throughput requirements.

QEC2900 2 NOVEMBER 2008
Certified System
Quality
Head Office
ISO 9001
SAI GLOBAL

GOLDSTEIN ESWOOD
Established 1911 • Proudly Australian Made
211-217 Woodpark Rd, Smithfield NSW 2164
Telephone: 1800 013 123 Facsimile: (02) 9604 5420
Email: sales@goldsteineswood.com.au

"Serving those who serve the best for 100 years"

Proudly Distributed By

Brochure ID: C45 - 8/12