NEW!

SMARTWASH™ 900

Intelligent "One Touch" Warewashing Systems

SW900
Professional Pass-through Dishwashers / Glasswashers

The New Smartwash Range
of Pass-through dishwashers / glasswashers are the first attractive, intelligent, one touch warewashing system in Australia that offers incredibly sustainable results in water and energy consumption. This professional warewasher offers the first one touch control panel with digital wash and rinse temperature displays for easy HACCP recording for accurate food safety reporting.
These machines are sleek and compact because we know space is of the essence and presentation is key.

"Huge 465mm opening for large items e.g. Pots"

Heat Recovery Model SW900XV

"The unique heat recovery system recycles energy from the steam generated by the dishwasher which saves energy in every cycle."

OPTIONAL: Insulated eco hood for energy saving and noise reduction saves up to 0.5 KW per hour.
Model SW900X includes insulated hood

Easy to operate ***"one touch"*** control panel

Only Smartwash offers you a warewasher with one touch control, **drain detergent & rinse aid pumps fitted as standard,** a self cleaning cycle and 3 wash cycle options, offering you an economical and sustainable solution for your business.

WaterMark

Type Tested

SMARTWASH 12 MONTHS GUARANTEE PARTS & LABOUR WARRANTY

1800 013 123
goldsteineswood.com.au

SW900 & SW900X

Professional Pass-through Dishwasher / Glasswasher

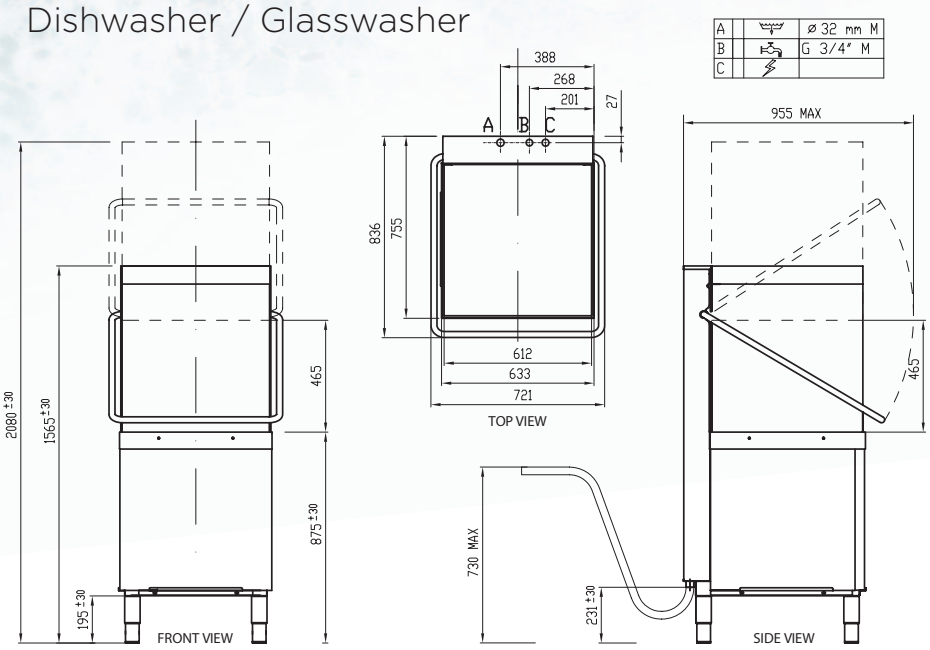

SW900X same as above, plus an insulated hood

Specifications:	SW900 & SW900X
Dimensions:	633 x 755 x 1565 mm
Hood construction:	single-skinned
Hood opening:	465
Hood lift system:	ProGlide (3 kg)
Hood lift handle:	all-around
Wash chamber:	TotalClean - Pipe Free
Rack stand construction:	S/S wire hinged
Tank volume:	22 litres
Tank construction:	deep drawn
Tank heating element:	2,5 KW
Wash pump type:	Double flow
Wash pump power:	700 W
Rinse system:	SmartRinse
Rinse booster pump:	yes
Break tank:	yes
Boiler heating element:	6,0 KW
Fresh water consumption:	2,3 lt/rack
Drain system:	SmartDrain (partial drain)
Drain pump:	standard
Dosing system:	ProDose electr. Controlled
Detergent dispenser:	Standard - Built-In
Rinse aid dispenser:	Standard - Built-In
Total electric load at 415V (3PH+N+E):	6,700 W
Wash cycles:	60, 90, 120 sec
Special cycles:	3
Self cleaning cycle:	yes
Control type:	SmartBar
Screen type:	LED
Machine's status indication:	yes
Watermark approval:	WMKT25317

SW900XV (with heat recovery system)

Professional Pass-through Dishwasher / Glasswasher

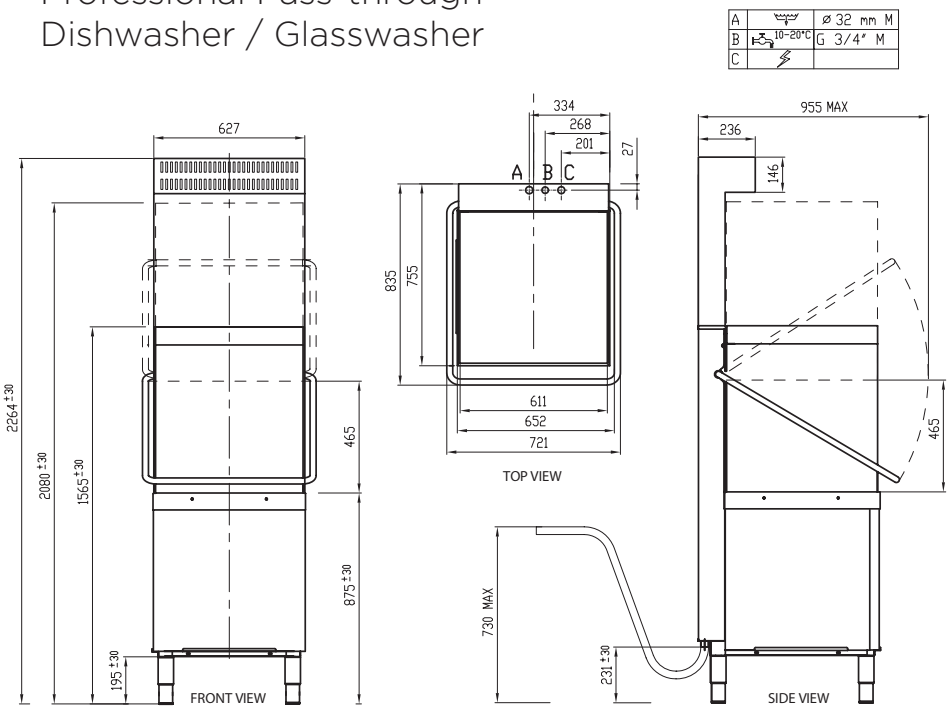

Specifications:	SW900XV
Dimensions:	633 x 755 x 2180 mm
Hood construction:	double-skinned
Hood opening:	465
Hood lift system:	ProGlide (3 kg)
Hood lift handle:	all-around
Wash chamber:	TotalClean - Pipe Free
Rack stand construction:	S/S wire hinged
Tank volume:	22 litres
Tank construction:	deep drawn
Tank heating element:	2,5 KW
Wash pump type:	Double flow
Wash pump power:	700 W
Rinse system:	SmartRinse
Rinse booster pump:	yes
Break tank:	yes
Boiler heating element:	9,5 KW
Fresh water consumption:	2,3 lt/rack
Drain system:	SmartDrain (partial drain)
Drain pump:	standard
Dosing system:	ProDose electr. Controlled
Detergent dispenser:	Standard - Built-In
Rinse aid dispenser:	Standard - Built-In
Total electric load at 415V (3PH+N+E):	10,200 W
Wash cycles:	60, 90, 120 sec
Special cycles:	3
Self cleaning cycle:	yes
Control type:	SmartBar
Screen type:	LED
Machine's status indication:	yes
Watermark approval:	WMKT25317

Goldstein Eswood
211 - 217 Woodpark Road SMITHFIELD NSW 2164
Telephone: 1800 013 123 Fax: (02) 9604 5420
Email: sales@goldsteineswood.com.au
service@goldsteineswood.com.au

Proudly Distributed By

Certified System Quality Head Office ISO 9001 SAI GLOBAL

Brochure ID: C52 - 03/14

serving those who serve the best for more than 100 YEARS 1911 - 2014

goldsteineswood.com.au

Goldstein Eswood continually strive to improve all of our products, therefore specifications may be amended from those printed in this brochure without notice.