NEW!

SMARTWASH™ 400

Intelligent "One Touch" Warewashing Systems

SW400
Professional Undercounter Dishwasher / Glasswasher

The New Smartwash Range
of undercounter dishwashers / glasswashers are the first attractive, intelligent, one touch warewashing system in Australia that offers incredibly sustainable results in water and energy consumption.
This professional warewasher offers the first one touch control panel with digital wash and rinse temperature displays for easy HACCP recording for accurate food safety reporting. These machines are sleek and compact because we know space is of the essence and presentation is key.

Only Smartwash offers you a warewasher with one touch control, drain detergent & rinse aid pumps fitted as standard, a self cleaning cycle and 3 wash cycle options, offering you an economical and sustainable solution for your business.

Easy to operate "one touch" control panel

- Drain pump fitted as standard
- User friendly **ONE TOUCH** control panel with digital wash and rinse temperature displays for easy HACCP recording
- Built-in detergent and rinse aid pumps fitted as standard
- Supplied with 430 x 360mm (17" x 14") glass rack, will also take 14" x 14" and 400 x 400mm dish racks
- Up to 1200 glasses per hour. Compartmented racks available to suit tall stem glasses
- Water saving - uses only 1.9 litres per cycle
- Three wash cycles of 60, 90 & 120 seconds
- Generous 325mm door height opening will take a variety of glassware including the tallest of stemware and large jugs
- Supplied with power cord, water & drain hoses, detergent, rinse aid & drain pumps. Simple & quick installation, no commissioning required
- Self cleaning cycle, easily removable spray arms & filters together with a pressed wash tank
- Double skinned door drastically reduces heat & sound emissions
- Self-Diagnostic system for accurate fault finding & reduced ownership costs
- Thermostop Function to ensure set rinse temperature is achieved
- 4 x 150mm legs included
- Quality European made. Built to Eswood specifications

WaterMark

Type Tested

SMARTWASH 12 MONTHS GUARANTEE PARTS & LABOUR WARRANTY

1800 013 123
goldsteineswood.com.au

NEW!

SMARTWASH™ 400

SW400
Professional Undercounter Dishwasher / Glasswasher

Utilises 400 x 400mm Dish/Cup rack or 17" x 14" & 14" x 14" Glass rack

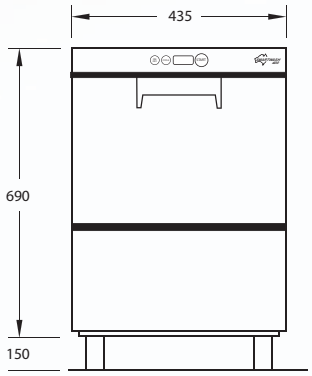

FRONT VIEW

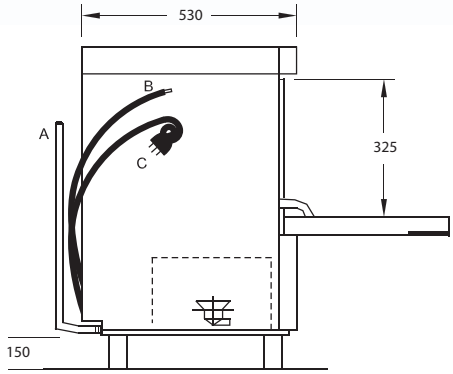

SIDE VIEW

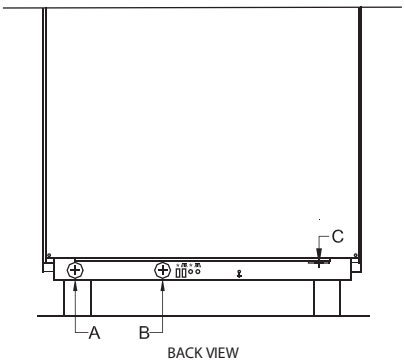

BACK VIEW

SW400 Specifications:	
Electrical Supply (V/Hz/ph):	240V / 50Hz / 1ph
Dimensions (WxDxH):	435 x 530 x 690mm
Basket Size:	400 x 400mm or 14" x 17" or 14" x 14"
Door Entry:	325mm
Cycle Length (3 wash cycles):	60 / 90 / 120secs
Self Cleaning Cycle:	YES
Total Installed Load:	3.5Kw / 15A
Water Consumption:	Approx. 1.9L per cycle
Door Construction:	Double-Skinned
Wash / Rinse Arms:	Hydrodynamic Parallel
Control Panel:	Advanced Electronic Soft-Pad
Temperature Gauges:	YES
Self-Diagnostic System:	YES
Built-in Rinse-Aid Dispenser:	YES
Built-in Detergent Dispenser:	YES
Built-in Drain Pump:	YES
Thermostop:	YES
Tank Strainers:	YES

A: Drain Ø 3/4" (20mm bore).
B: Water supply 3/4" BSP female (20mm).
C: Electrical Connection 15amp Plug.

Goldstein Eswood
211 - 217 Woodpark Road SMITHFIELD NSW 2164
Telephone: 1800 013 123 Fax: (02) 9604 5420
Email: sales@goldsteineswood.com.au
service@goldsteineswood.com.au

Proudly Distributed By

Certified System Quality Head Office ISO 9001 SAI GLOBAL

Brochure ID: C50 - 03/14

serving those who serve the best for more than 100 YEARS 1911 - 2014

goldsteineswood.com.au

Goldstein Eswood continually strive to improve all of our products, therefore specifications may be amended from those printed in this brochure without notice.