MiClean HL

Commercial Pass Through Dishwasher

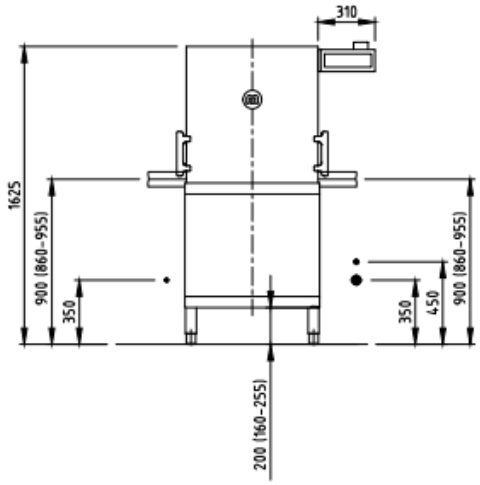

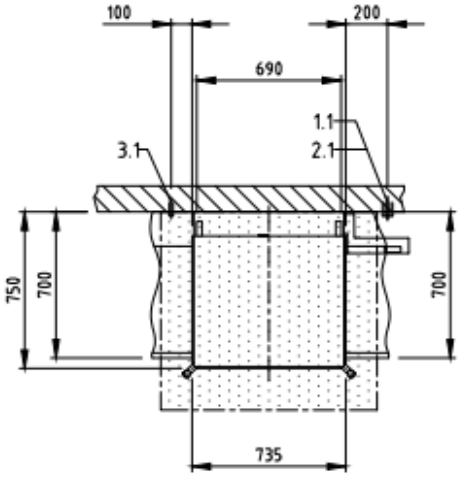

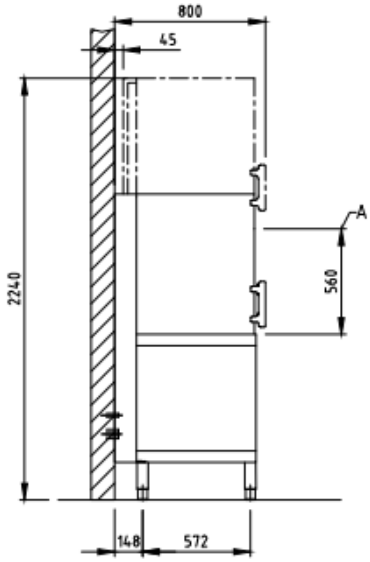

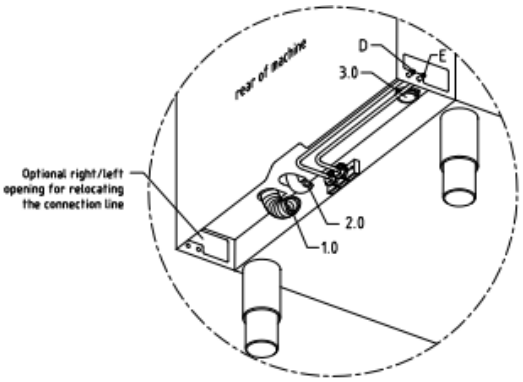

Product Features & Benefits

- Automatic hood operation with basket detection as standard. Hood closes once wash basket enters the machine and opens at the end of cycle.
- Touch TFT colour display made from hygienic safety glass with program progress indicator and Bluetooth interface that can be mounted on the left or right of hood or elsewhere in the wash area
- Intuitive operation-blue operating concept, components that need checking after self-clean cycle are blue in colour
- M-Clean filter-active filter system for removal of food debris from wash tank (includes monitoring of correct positioning and function)
- Stainless steel detergent and rinse aid lines with in the body of the machine
- Stainless steel single piece wash and rinse arms to improve wash result
- Stainless steel wash and rinse manifold for longevity and reliability

Optional Features

- GiO Reverse Osmosis
- Drying Table
- Air Concept

TECHNICAL SPECIFICATIONS			
Basket dimensions in mm			650 x 500
#Programme cycle in seconds			60/90/210
#Theoretical basket capacity			60/40/17
Water consumption liters per cycle			3.0 Variable
1.0	Machine connection drain pipe	Pump out drain	Hose ¾ “
1.1	Drain point	Max. 750mm from floor	50mm
2.0	Machine connection water point	Nominal value	Thread ¾ “
2.2	Water supply point	Flow pressure Temperature Water hardness	1 bar -5 bar Hot Water Max 60c Max 53.4ppm
3.0	Machine connection electrical	Total rating	5G 6mm2 supply cable fitted
3.1	Electrical point	Three phase	3NPE 400V 50Hz, 9.8 Kw, 16.3A

On cold water connection and/or short basket exchange times, the wash cycles may increase to achieve hygienic rinse temperatures
Cycle time can be customized to specific requirements on site