UG405DMAUS

UNDERBENCH PROFESSIONAL GLASSWASHER

400x400 mm basket,with adapter
for 17"x14"basket (included)

SMEG ECOLINE PROFESSIONAL DISHWASHERS

Guaranteed wash performance, every time.

In commercial dishwashers, the rinse is the most important part of the wash cycle, as it is the only one performed with clean water. This is the reason why, at Smeg, we believe all commercial dishwashers must have **a rinse pump on board**, the only way to guarantee that optimal and constant pressure and temperature are maintained throughout the rinse cycle.

We believe in our quality.

All dishwashers are manufactured in our state of the art factory in Italy, where we monitor all phases of design, engineering and production. We believe in our quality and this is the reason why we are pleased to offer **Extended Warranty** on our Ecoline dishwasher range.

PRODUCT FEATURES

- Construction in AISI 304 stainless steel
- Moulded rack guides
- **HTR (High Temperature Rinse) system with atmospheric boiler and rinse pump**
- 2.3 litres water rinse cycle
- Approximately 30% water exchange every cycle
- Drain pump with triple stage dynamic filtration system
- Door opening height: 330mm
- Electronic controls with 3 wash programs
- Shortest wash program 90 seconds
- Soft start wash pump
- Automatic self-cleaning cycle
- Shut-off at the end of drain cycle
- Thermostop system to ensure correct rinse temperature
- Adjustable peristaltic pumps for detergent and rinse-aid injection
- Self-diagnostic system with error messages
- 4 x 150mm legs (included)
- 15 Amp plug
- **24 months parts and 12 months labour warranty**

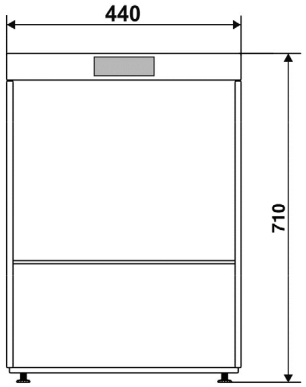

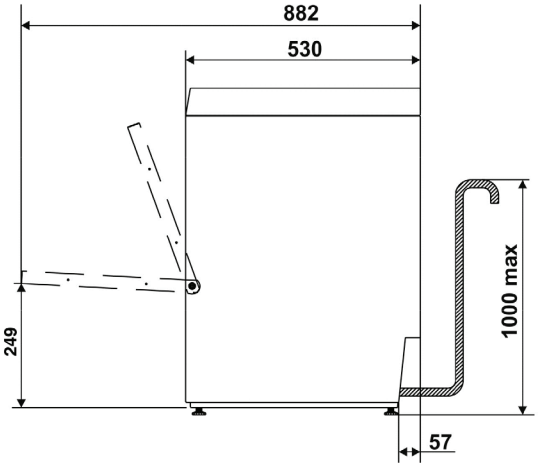

smeg FOODSERVICE

UG405DMAUS

UNDERBENCH PROFESSIONAL GLASSWASHER

400x400 mm basket,with adapter
for 17"x14"basket (included)

TECHNICAL SPECIFICATIONS

Dimensions (mm) (WxDxH)	440x530x710 (approx 860H with legs)
Basket (mm)	400x400
Door clearance (mm)	330
Type of interface	electronic
Door/hood structure	double skinned insulated
Supplied water temperature (°C)	from cold to 60°
Tank volume (litres)	8
Tank resistance (W)	2,000
Filtering system	Tank filter + selective filter
Boiler volume (litres)	4
Boiler heating element (W)	2,700
Wash pump (W)	290
Tank temperature (°C)	60°
Rinse pump	Yes
Rinse temperature (°C)	85°
Adjustable temperatures	Yes
Water consumption (litres/cycle)	2.3

Minimum supply pressure (bar)	2.5
Drain pump	Yes
Rinse aid pump	Peristaltic
Detergent pump	Peristaltic
Programme 1 (sec)	90*
Programme 2 (sec)	150*
Programme 3 (sec)	240*
Special programmes	Total renewal of the water inside the tank Extra rinse Self-cleaning
Thermostop	Yes
Total power (W)	3,000
Electrical connection	Single Phase 15A
Basket number	
dishes	-
universal / glasses	2 x PB40G01
cutlery	1 x PHOOS01

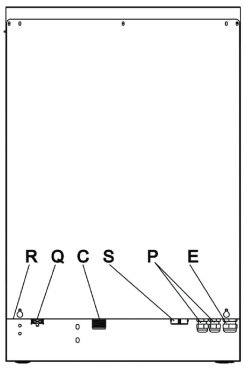

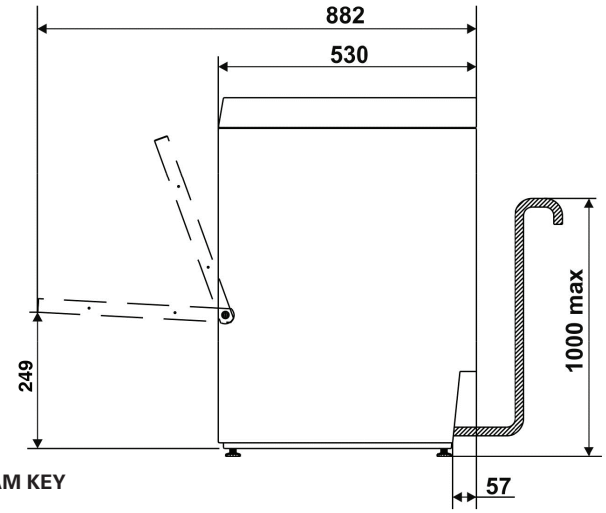

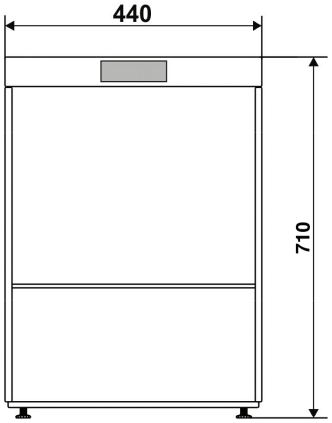

CONNECTION WIRING DIAGRAM KEY

R	Rear lower panel
C	Water supply tubing
S	Water drain tubing
Q	Equipotential terminal

P	Peristaltic doser tubes
E	Electrical power cable
F	External doser power supply cable input

* Supplied water temperature >50°C and < 60°C and three-phase electrical connection whenever possible

WaterMark

UNI EN ISO 9001 9130-Smeg | UNI EN ISO 14001 9191-SME2 | OHSAS 18001 9192-SME3

All data and descriptions in this document can be changed or cancelled at any time according to technical and commercial needs of the producer; all this without any obligation of notice and without any possibility of claim by the purchaser. Smeg Australia Pty Ltd reserves the right to make any changes deemed necessary for the improvement of its products without prior notice. The illustrations and descriptions contained in this catalogue are therefore not binding and are merely indicative.