Dish & glass washer - ECOMAX504

“Connect & use” dish & glass washer to suit all rack sizes up to 500x500mm

Product Advantages:

- **Easy-to-use** electronic controls with 2 cycles 60 & 150 seconds
- Digital temperature gauges
- **Suits all racks up to 500x500mm** - stainless steel grid shelf supports all rack sizes
- **Re-circulating & low 2.3 litre rinse volume** machine
- **Double skin door** for strength & durability for loading machine
- Usable chamber height of 360mm
- Polypropylene wash & rinse arm with **patented WIDE ANGLE FAN** nozzle to maximise wash & rinse performance
- **Self-cleaning cycle** on drain out
- Full width wash tank strainers & wash pump inlet strainer to ensure machine reliability
- **“Connect & use”**- fill & drain hoses, pump-out drain, chemical dispensers & power lead / plug included for quick & easy installation
- Rear castors & adjustable front feet for easy cleaning
- Includes 1 x plate rack, 1 x flat rack & 1 x cutlery holder
- Back flow prevention device as standard to meet Watermark Approval and ATS 5200.101
- NOT SUITABLE FOR USE WITH REVERSE OSMOSIS SYSTEMS
- MADE IN GERMANY

Technical Data

flexible drain hose 1000mm	Pump-out drain standard
fresh water connection: pressure hose 1000mm flow pressure incoming water temperature	Connection size: 3/4" BSP 80-600kPa 55-65°C
power cord	15amp single phase plug & lead
hose for detergent hose for rinse aid	Included
wash tank temperature	55-60°C
rinse water temperature (booster tank) low temp cut-out (thermostop) activated	Minimum 82°C Yes
cycle times	60 sec. 150 sec.
water consumption	2.3litres
tank capacity	25 litres
tank heating	1.8kW
power supply	240/50/1 - 15amp
booster loading	1.9kW
total loading	2.2kW
pump capacity	340watts
loading height	360mm

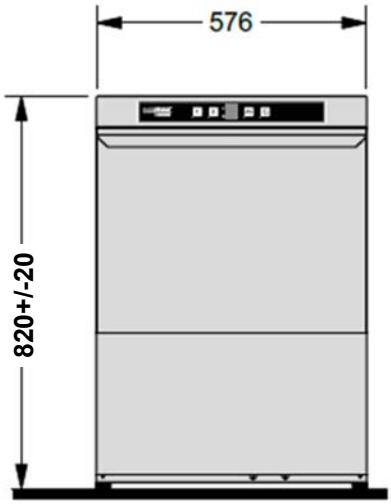

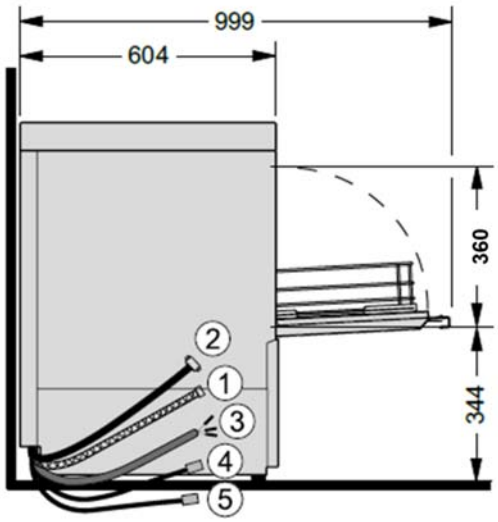

Water hardness should not exceed 3°dH, if higher we recommend using a water softener.

If mineral content is high a demineraliser may be advisable.