GM

Series 6

UNDERCOUNTER GLASSWASHER

Operator Manual

WARNING
Before installation and commissioning, you must read the safety instructions and warnings carefully and all the warning labels attached to the equipment.

IMPORTANT
Failure to comply (even partially) with the instructions given in this manual will invalidate the product warranty and relieves the manufacturer of any responsibility.

IMPORTANT
The alteration of machine operation, design or the replacement of parts not approved by the manufacturer may void warranties and approvals.

We have checked that the contents of this document correspond to the model described. There may be discrepancies nevertheless, and no guarantee can be given that they are completely identical. The information contained in this document is reviewed regularly and any necessary changes will be included in the next edition. We welcome suggestions for improvement.

Document subject to change without prior notice.

Information supplied in this manual is copyright. No part of this work may be reproduced or copied in any form or by any means, electronic or mechanical without the express permission of the author / publisher.

Distributed In Australia by
MOFFAT®
Service 1 800 622 216
Parts 1 800 337 963
740 Springvale Road, Mulgrave 3170, Victoria, Tel 03 9518 3888 Fax 03 9518 3818

Safety Instructions

WARNING
Equipment contains dangerous voltages and can be hazardous if installed or operated incorrectly. Non-compliance with **Warnings** or failure to follow the instructions contained in this manual can result in loss of life, severe personal injury or serious damage to property.

Installation

- Use qualified, skilled personnel
- Follow installation instructions
- Connect to correct voltage and supply current
- Provide fully accessible Electrical Isolation Switch & water supply valves

Training and Supervision

- Read and Understand the Operating instructions and train all staff
- This appliance must not be operated by children or infirm persons
- Machine panels must only be removed by suitably qualified and trained personnel – internal hazards include live electrics and very hot surfaces
- This appliance is not intended for use as a stepladder

Hot Surfaces

- Some surfaces may be hot or very hot

Chemicals

- Commercial dishwashing detergents are hazardous – handle with care
- Read and follow the safety information found on the labels of detergent containers and Material Safety Data Sheets
- Use protective eyewear and clothing if decanting containers

Hot Water

- Do not put hands in wash water which may be over 60°C and contain hazardous caustic detergent
- Rinse water can be over 90°C
- Door safety switches are designed for emergency use only

Cleaning

- Do not hose down the machine or splash water over the exterior
- Watch for broken glass etc when cleaning the inside of the machine

Power Cord Replacement

- If the supply cord is damaged, it must be replaced by the manufacturer or its service agent or a similar qualified person in order to avoid a hazard

Installation

WARNING
Installer must be suitably qualified and ensure compliance with all local codes and standards including AS/NZS 3500.1.

Failure to comply even partially with installation instructions may void the warranty.

Positioning

Unpack machine, check for damage and complete delivery. Install machine on sound waterproof self-draining floor and use adjustable feet to level machine. Adjacent surfaces should be heat resistant and moisture proof, especially benchtop lower surfaces above undercounter machines. Allow room for detergent to one side of machine or in adjacent cupboard. 20litre container requires about 450H x 250W x 350D, but smaller containers are available from many suppliers.

Water Supply

Hot water temperature	65°C ± 5°C
Pressure	200-350 KPa = 30 - 50 Psi.
Connection	20 mm (3/4" BSP) male
Flow rate minimum	20 litres per minute
Hot water consumption	2 litres per cycle approximately
Cold water supply	same pressure and flow rate as above
Backflow prevention	DCV = Dual Check Valves supplied with machine

Pressure limiter may be required. . Don't use small diameter plastic supply lines. FLUSH supply line before connection. Connect supplied DCV to water supply. Poor quality supply or excessive water hardness may affect performance or damage machine – filtration and/or softening is recommended. Optional rinse booster pump available for very low pressure.

Waste

40 mm gravity drain – refer point B on installation diagram – run waste directly behind the machine or through hole in base.

Power

Electrical supply required is 15A 240V 50Hz via switched outlet adjacent to machine. Cord set including 15A plug supplied (located under rear cover)

Detergent

Insert pump inlet hose with white ceramic collar into container of commercial low foam detergent. Commercial detergents are usually hazardous – read instructions and handle with care.

Rinse Aid

If rinse aid injector is fitted insert injector inlet hose with steel collar into rinse aid container. Check fluid is steadily rising inside hose during pulse at start of rinse cycle. Rotate adjusting screw clockwise to reduce flow, anticlockwise to increase flow. The injector is activated by rinse pressure - to prime the system switch the machine off and back on several times during filling to mimic multiple rinse cycles (otherwise it will take several operating cycles to bring rinse fluid to required concentration).

Installation Checklist

Complete attached Installation Checklist to ensure machine is installed and running correctly, and operator is familiar with operating procedures.

Troubleshooting

If machine doesn't fill after switching on power, check and ensure that hot water supply tap is open, water supply pressure is not below specification and Dual Check Valve is correctly installed (arrows on the dual check valve's body specify water flow direction).

GM6 (W) INSTALLATION DIAGRAM

GM6-W 22-04-10 3A

FRONT VIEW

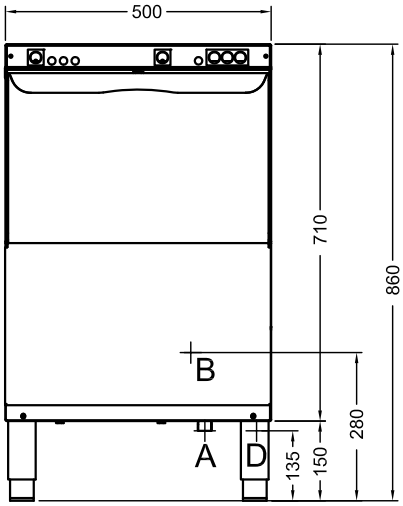

SIDE VIEW

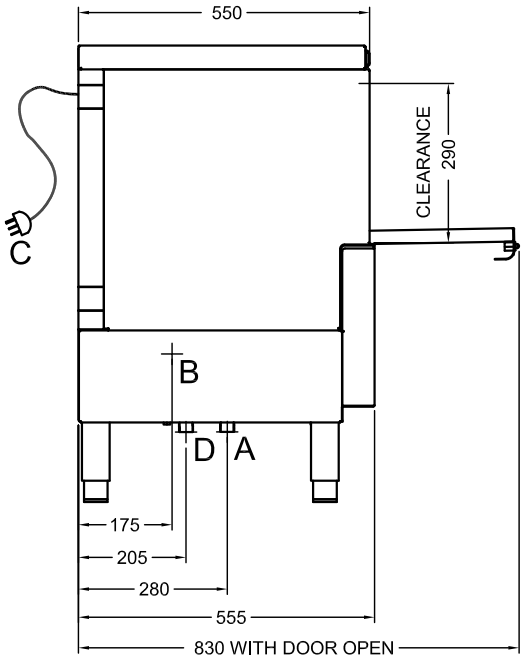

PLAN VIEW

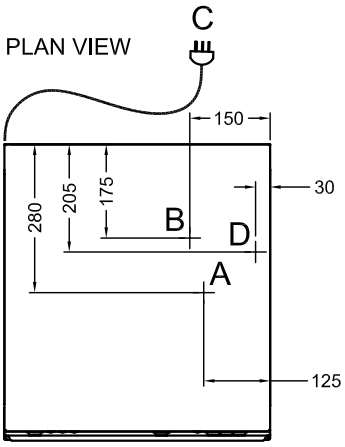

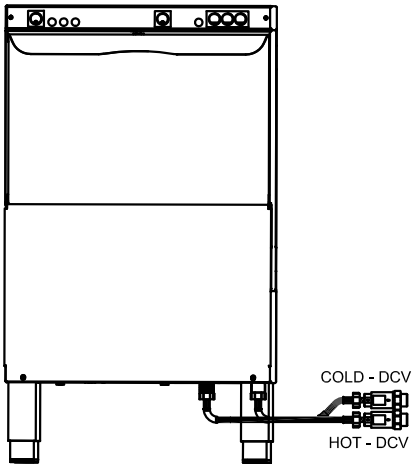

Ensure Dual Check Valves are located at the water supply entry point.

LEGEND

A	HOT WATER SUPPLY
B	WASTE
C	POWER SUPPLY
D	COLD WATER SUPPLY

All dimensions in millimetres

Installation Checklist

CHECK	OK / NOTES	
Delivery		
Supplied complete		no transit damage
Position		
Level and stable		on sound, waterproof, self draining floor
Water		
Isolator valve fitted		Accessible, all fittings sound, no leaks
DCVs fitted (Washtech only)		Correct direction
Temperature		65 ± 5°C
Flow rate		Minimum 20 litres per minute
Pressure		200-350 kpa, limiter fitted if above this range
		Booster fitted if below this range
Cold water when required		Pressure not above 350 kpa
Hardness		Filter or softening if required
Power		
Isolating switch		Fitted, functional and accessible
Supply as specified		Voltage, current, circuit breaker
Waste		
Usually 40 mm		Sound, no leaks
Air gap on pumped drain		

Chemicals

	product name		container	no leaks	primed	conc.OK
Detergent						
Rinse Aid						

Machine operation		
Run several cycles		
Confirm correct operation		Including correct fill levels
Operator training		

Confirm Operator has copy of Operator Manual and is familiar with procedures

Start-up	
Pre-rinse and racking	
Machine operation	
Drain	
Clean	
Shut-down	

Model / Serial	
Owner	
Location	
Technician	
Date	
Signed	

Operation

Description of Controls

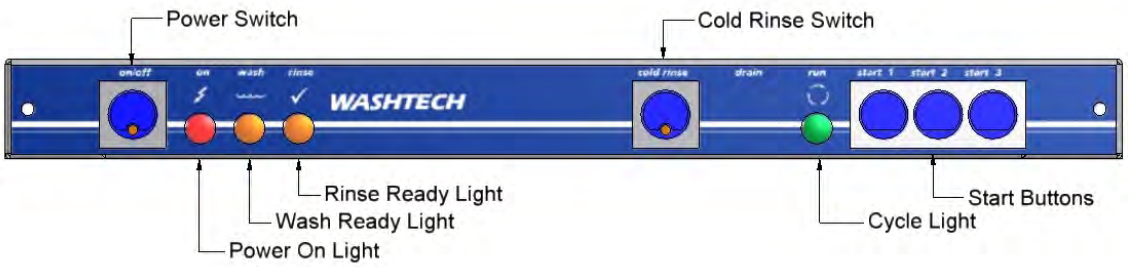

Operating Instructions

Start up

Fit drain upstand, wash pump filter and shut door.
Turn wall and machine power switches on.
Power light glows red and machine fills automatically.
Wash Ready light glows amber when wash tank is ready.
Rinse Ready light glows amber when the machine is up to required temperature and ready to run.

Operation

Load rack into machine and shut door.
When required, turn Cold Rinse switch on for cold final rinse.
Press Start button 1, 2 or 3 for 1, 2 or 3 minute cycle accordingly.
Cycle light glows green while machine operates.
When Cycle light goes out, cycle is complete.
Remove rack. Close door.
NOTE: Machine will not operate unless Ready lights are on.

Shut down every night

Standard machine without Drain Pump
Turn machine and wall power switches off.
Remove drain upstand to drain wash tank.
Remove wash pump filter and rinse clean.
Replace drain upstand and wash pump filter.

Drain Pump fitted
Open the door and turn Drain switch on.
After drain starts remove drain upstand when the top of the upstand is above the surface of the water.
Allow to drain for approximately 1 minute.
Turn Drain and Power switches off.
Remove filters and rinse clean. Replace filters and drain upstand.

Dishwashing Procedures

for best results

Note: these are general instructions to assist in getting the best performance from Washtech dishwashers – some comments and / or illustrations may not apply to every unit.

Installation

Read the Operator Manual. Correct installation, including an adequate supply of water at the correct temperature and pressure is essential for effective operation of your machine. Refer installation instructions for details. Drain hose outlet height is important on some models. Always install on a sound self-draining floor. Water softening is recommended in hard water areas - especially for glasswashing

Pre-rinsing

Pre-scraping of dishes is required by hygiene regulations. The best method is to pre-rinse with a pre-rinse spray unit - or alternatively by scraping or dunking in water.

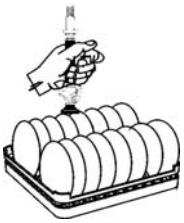

Cutlery Procedures

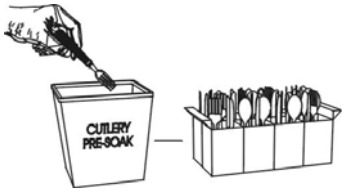

Pre-soak cutlery in warm water, preferably containing cutlery pre-soak compound - refer your chemical supplier.

Do not overfill cutlery containers. Cutlery should be loose with handles down. Sort after washing rather than before. Cutlery of only one type nests together and obscures wash water.

Racking Procedures

Do not overload racks, minimize the overlap of crockery. Cycle times are short and water consumption per cycle low - so there is no advantage in overloading racks.

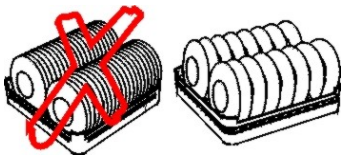

Cycle Times

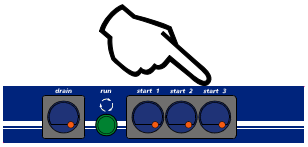

For multi-cycle machine use the longest cycle whenever possible. Note that water consumption does not increase with longer cycles. Only choose shorter, faster cycles when necessary.

Detergent

Use of correct type and quantity of low foaming detergent is essential to machine performance. Ask a professional chemical supplier to recommend the best types and concentrations of detergent, rinse fluid and cutlery soak for your situation. Note that detergents are hazardous. Poorly formulated detergents, particularly those containing chlorine, can shorten the life of dispensing systems and the machine itself.

Dishwashing Procedures

for best results

Drying

Single tank commercial dishwashers do not have a drying cycle. However, the machines do rinse at high temperatures which promote fast drying particularly when drying agents are used. We recommend prompt removal of the rack from the machine - leave the rack on the bench for 2 to 3 minutes before emptying. This time will be reduced with correct use of drying agent (rinse fluid) which reduces water surface tension and allows water to drain quickly from washware. For advice on drying agents and injectors refer to your chemical supplier.

Daily Cleaning

It is essential that the machine is drained and cleaned at the end of each day. Drain the machine then remove, clean and replace filters as per the operating instructions. Regularly check the wash and rinse jets and clean them if necessary – see below.

Regular Cleaning

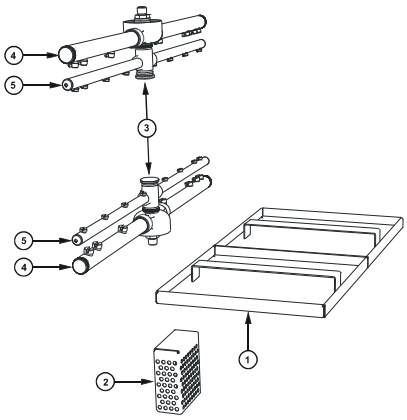

Remove scrap trays① and wash pump inlet filter②, where fitted, and rinse or brush clean.

Remove wash and rinse arms by undoing the central thumbscrews③. If necessary, remove the end cap screws④ from the wash arms and the end screws⑤ from the rinse arms and flush the arms with water and/or use a toothpick or paperclip to clear jets.

Note: arms and filters vary with model and may appear different from this illustration e.g. those models with plastic wash arms have removable jets for ease of cleaning

Regular Servicing

Regular servicing is essential for optimum performance and long machine life. Maintenance is recommended at least once every six months – especially when chemical injectors are fitted.

Please contact Moffat or your Authorised Service Provider to organize regular servicing of the dishwasher - discuss a Preventative Maintenance Agreement.

Note: these are general instructions to assist in getting the best performance from Washtech dishwashers – some comments and / or illustrations may not apply to every unit.

GL5/GM6(W) SCHEMATIC DIAGRAM

060157 01/11/11 1 G

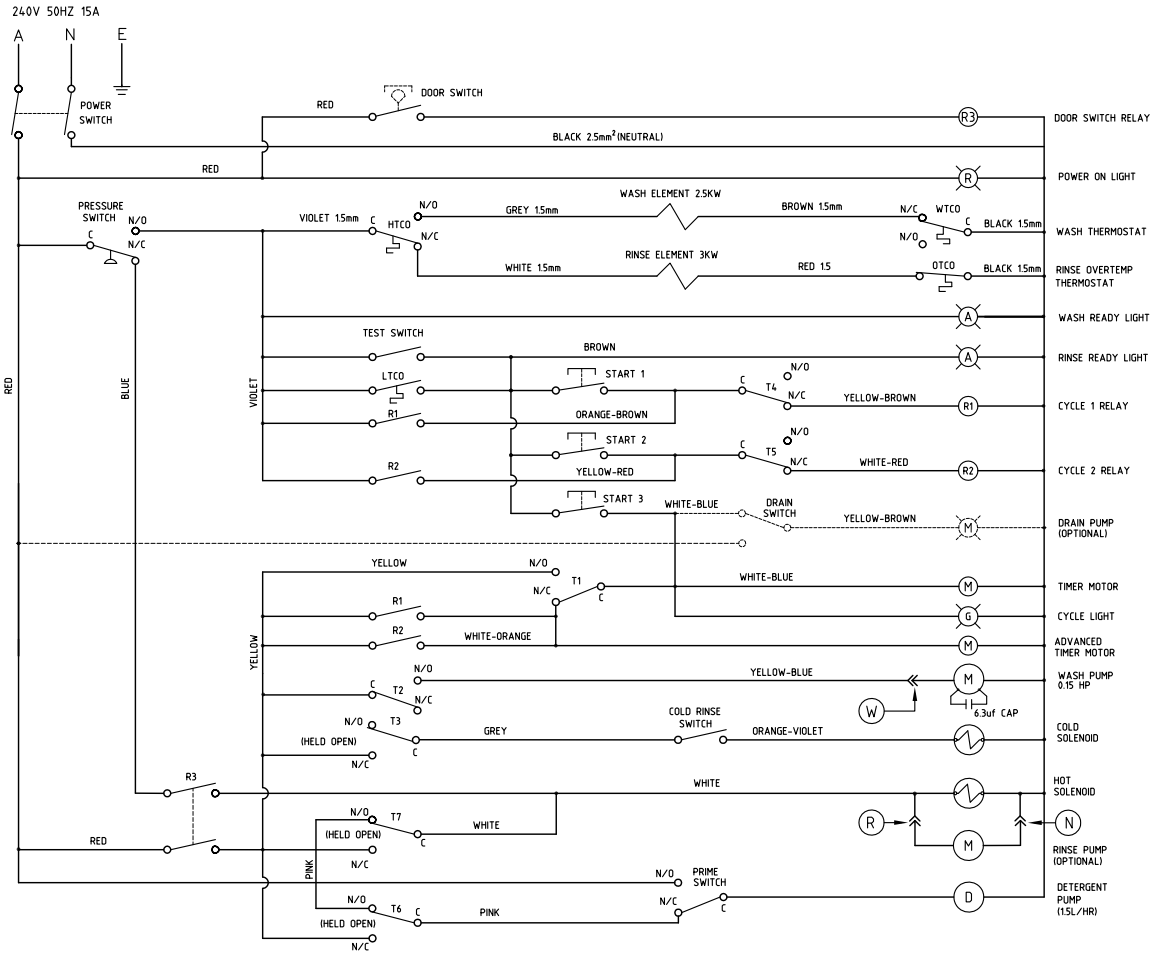

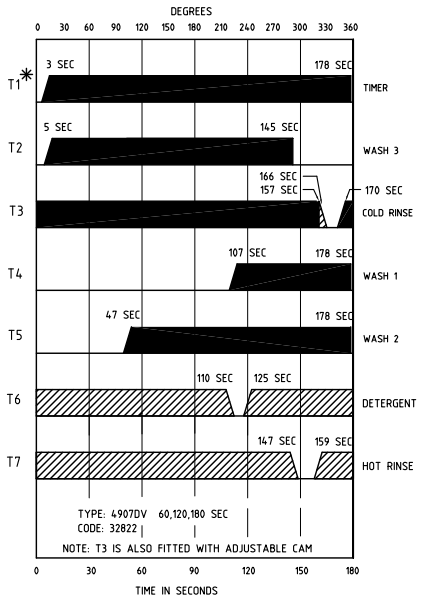

DETERGENT AND RINSE AID CONNECTION OPTIONS

Cycle active feed

- Wash Active - refer W - connection to wash pump
- Rinse Active - refer R - connection to hot solenoid
- Neutral - refer N - connection to hot solenoid

For rinse aid injection. Washtech part # C620120 is recommended and operates hydraulically.

* T1 IS CAM CLOSEST TO 180 SEC. TIMER MOTOR

* * ADJUST T6 AS REQUIRED FOR DETERGENT CONTROL

KEY

- ☐ ADJUSTABLE CAM
- ■ PRESET CAM

Date	Change	Issue
12-12-06	CHANGE RINSE AND WASH ELEMENT CIRCUITS	1-C
16-04-07	ADD OPTIONAL RINSE PUMP	1-D
9-10-08	CHANGE DETERGENT INJECTION TIME. ADD OPTIONAL CONNECTION POINTS	1-E
19-04-10	ADD GM6 TO DESCRIBTION	1-F

GM6 WIRING DIAGRAM

060266 16/06/10 3A

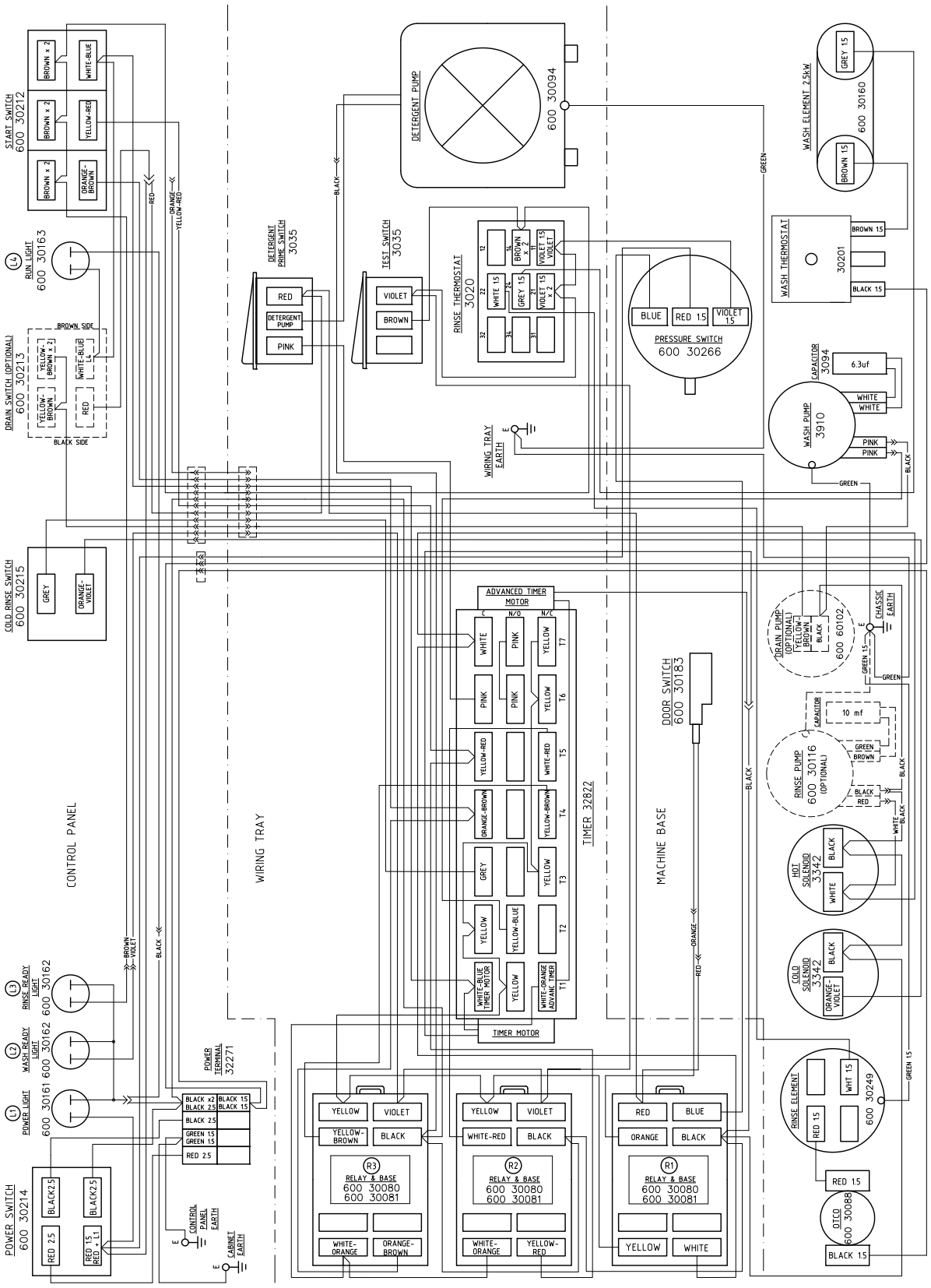

Information supplied in this manual is copyright. No part of this work may be reproduced or copied in any form or by any means, electronic or mechanical without the express permission of the author / publisher.

Distributed In Australia by
MOFFAT®
Service 1 800 622 216
Parts 1 800 337 963
740 Springvale Road, Mulgrave 3170, Victoria, Tel 03 9518 3888 Fax 03 9518 3818