AL

PASSTHROUGH DISHWASHER

Operator Manual

WARNING
Before installation and commissioning, you must read the safety instructions and warnings carefully and all the warning labels attached to the equipment.

IMPORTANT
Failure to comply (even partially) with the instructions given in this manual will invalidate the product warranty and relieves the manufacturer of any responsibility.

IMPORTANT
The alteration of machine operation, design or the replacement of parts not approved by the manufacturer may void warranties and approvals.

We have checked that the contents of this document correspond to the model described. There may be discrepancies nevertheless, and no guarantee can be given that they are completely identical. The information contained in this document is reviewed regularly and any necessary changes will be included in the next edition. We welcome suggestions for improvement.

Document subject to change without prior notice.

Information supplied in this manual is copyright. No part of this work may be reproduced or copied in any form or by any means, electronic or mechanical without the express permission of the author / publisher.

Distributed In Australia by
MOFFAT®
Service 1 800 622 216
Parts 1 800 337 963
740 Springvale Road, Mulgrave 3170, Victoria, Tel 03 9518 3888 Fax 03 9518 3818

Safety Instructions

WARNING
Equipment contains dangerous voltages and can be hazardous if installed or operated incorrectly. Non-compliance with **Warnings** or failure to follow the instructions contained in this manual can result in loss of life, severe personal injury or serious damage to property.

Installation

- Use qualified, skilled personnel
- Follow installation instructions
- Connect to correct voltage and supply current
- Provide fully accessible Electrical Isolation Switch & water supply valves

Training and Supervision

- Read and Understand the Operating instructions and train all staff
- This appliance must not be operated by children or infirm persons
- Machine panels must only be removed by suitably qualified and trained personnel – internal hazards include live electrics and very hot surfaces
- This appliance is not intended for use as a stepladder

Hot Surfaces

- Some surfaces may be hot or very hot

Chemicals

- Commercial dishwashing detergents are hazardous – handle with care
- Read and follow the safety information found on the labels of detergent containers and Material Safety Data Sheets
- Use protective eyewear and clothing if decanting containers

Hot Water

- Do not put hands in wash water which may be over 60°C and contain hazardous caustic detergent
- Rinse water can be over 90°C
- Door safety switches are designed for emergency use only

Cleaning

- Do not hose down the machine or splash water over the exterior
- Watch for broken glass etc when cleaning the inside of the machine

Service/Repair

- Under no circumstances the user should attempt to carry out repairs
- All service/repair work must be carried out by qualified personnel only

Installation

WARNING
Installer must be suitably qualified and ensure compliance with all codes and standards including AS/NZS3500.1.

Failure to comply even partially with installation instructions may void the warranty.

Positioning

Unpack machine, check for damage and complete delivery. Install machine on sound waterproof self-draining floor and use adjustable feet to level machine. Allow room for detergent to one side of machine or in adjacent cupboard. 20litre container requires about 450H x 250W x 350D, but smaller containers are available from many suppliers.

Benchwork

Refer Bench Details diagram.
In corner installations the front of the machine must face to the left of the corner. In corner installations high or angled bench return off wall may clash with door handle. Level and secure machine and benches. Adjust to ensure smooth travel of rack through machine.

Water Supply

Hot water temperature	65°C ± 5°C
Connection	20 mm (3/4" BSP Male)
Flow rate minimum	20 litres per minute
Consumption per cycle	3.5 litres approximately
Backflow prevention	DCV = Dual Check Valve fitted standard
Pressure	200-350 KPa = 30-50 Psi.

Above this range fit pressure limiter. Don't use small diameter plastic supply lines especially below this range when optional rinse booster pump may be required. FLUSH supply line before connection. Poor quality supply or excessive water hardness may affect performance or damage machine – filtration and/or softening is recommended.

Waste

40 mm gravity drain – refer to point B on installation diagram – run waste directly behind the machine, through knock outs in side panels or through hole in base. If drain pump is fitted, run drain hose behind the machine or through knock outs in side panels.

Power

Machine requires 3 Phase, Neutral and Earth, 400/415V, 15A/ph, 50Hz, permanently wired via wall switch mounted adjacent to machine. Wash pump rotation must be checked after installation to ensure correct direction (excessive noise and damage with incorrect direction).

Installation Checklist

Complete attached Installation Checklist to ensure machine is installed and running correctly, and operator is familiar with operating procedures.

Troubleshooting

If the machine doesn't fill after switching on the power, check and ensure that the hot water supply tap is open, water supply pressure is not below specification and Dual Check Valve is correctly installed (arrows on the dual check valve's body specify water flow direction).

AL-3 INSTALLATION DIAGRAM

AL-3 17-02-11 1B

benchwork minimum dimensions
corner installation

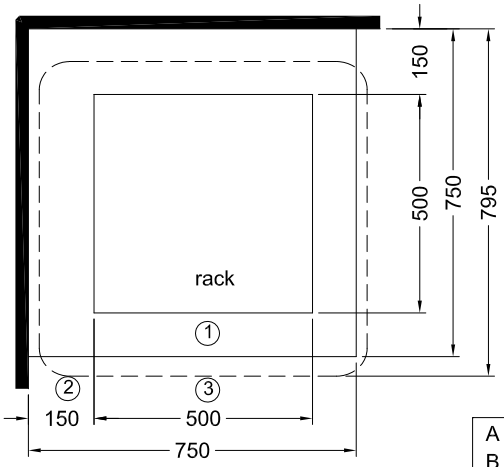

in-line installation

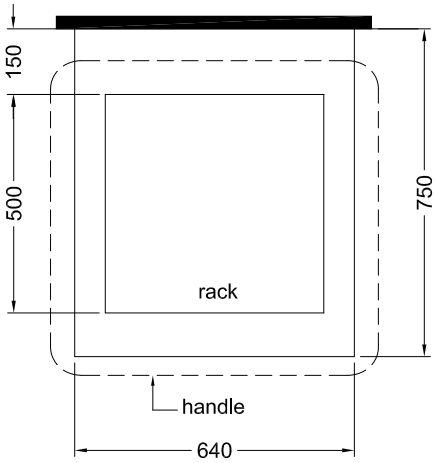

A	Hot water supply
B	Waste
C	Power supply

Corner installation

1. machine must face left
2. splashback return no higher than 150mm
3. allow 300 clearance beneath bench to front for service access

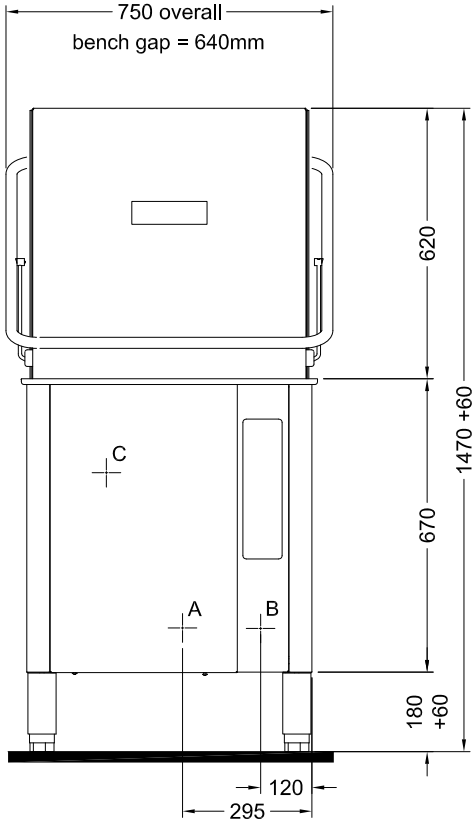

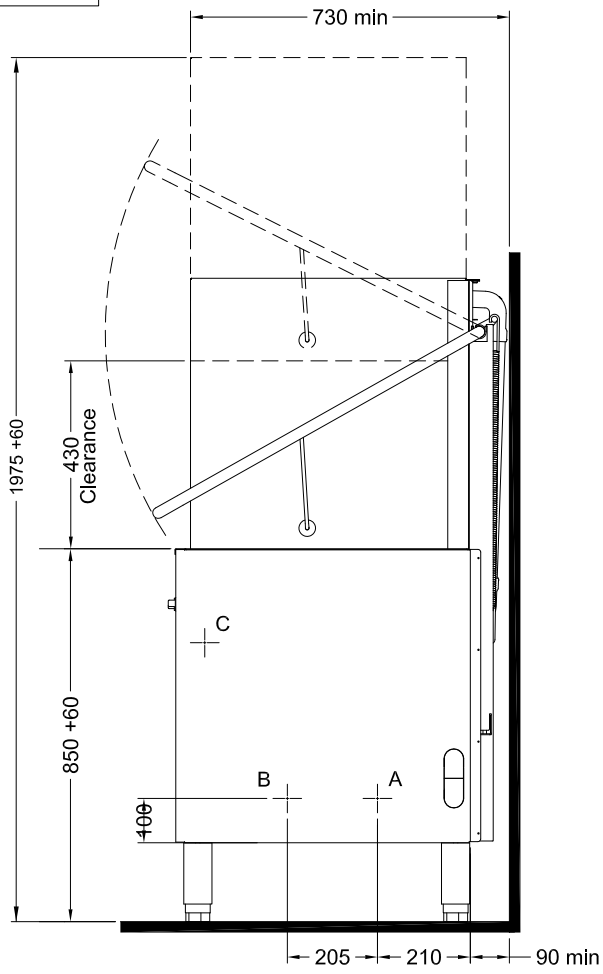

All dimensions in millimeters

AL/M2/ME/M1 BENCH DETAILS

M2 0006 22-06-07 1 I

		M1	M2/ME	AL	AL8
M	BENCH DEPTH MINIMUM - for straight through only	600	700 (650)	750 (700)	750 (700)
R	RETURN MINIMUM - for straight through only	115	125 (90)	150 (125)	150 (125)
G	BENCH GAP	510	595	640	790
B	BENCH OPENING	460	535	550	550
F	SPLASH BEAD MINIMUM	25	40 (25)	50 (25)	50 (25)
D	RACK SIZE	435	500	500	500
E	RACK PATH	450	520	520	520
S	SINK WIDTH	350	450	450	450
T	CLEARANCE	35	35	35	35
H	DISTANCE TO WALL FOR CORNER INSTALLATION	620	720	760	N/A

Corner Detail

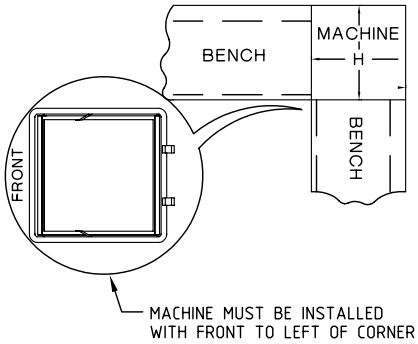

Side View

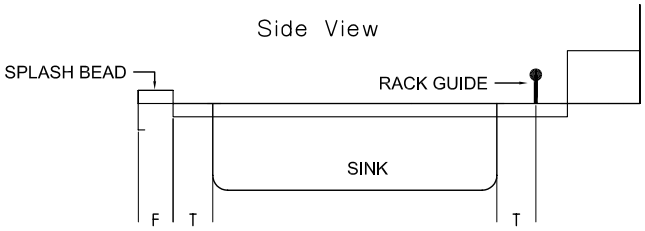

Straight through detail

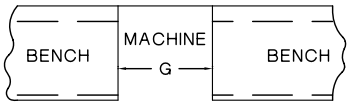

All dimensions in millimetres

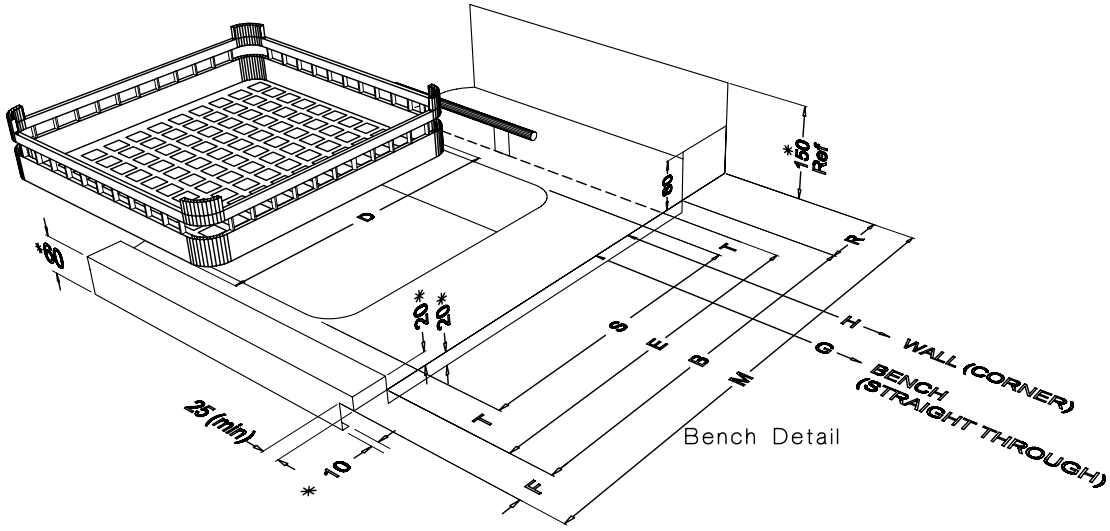

Bench Detail

Notes: 1. These dimensions are recommendations. They apply to straight through or corner installations. They are designed to ensure that the dishrack slides over an adjacent sink directly into the dishwasher. We recommend use of the sink size shown and a rack guide to keep the rack up against the splash bead and prevent it from falling into the sink. This arrangement is particularly suitable when a pre-rinse gun is used (as recommended).

2. Bench depth can be reduced by reducing the size of the splash bead and in straight through installations (only) dimension R can be reduced to the minimum shown.

3. Drawing is for the left of the machine - other side is mirror image (sink may be to either side.

4. Dimension with ✳ are suggestions only and not critical.

Installation Checklist

CHECK	OK / NOTES	
Delivery		
Supplied complete		no transit damage
Position		
Level and stable		on sound, waterproof, self draining floor
Water		
Isolator valve fitted		Accessible, all fittings sound, no leaks
DCVs fitted (Washtech only)		Correct direction
Temperature		65 ± 5°C
Flow rate		Minimum 20 litres per minute
Pressure		200-350 kpa, limiter fitted if above this range
		Booster fitted if below this range
Cold water when required		Pressure not above 350 kpa
Hardness		Filter or softening if required
Power		
Isolating switch		Fitted, functional and accessible
Supply as specified		Voltage, current, circuit breaker
Waste		
Usually 40 mm		Sound, no leaks
Air gap on pumped drain		

Chemicals

	product name		container	no leaks	primed	conc.OK
Detergent						
Rinse Aid						

Machine operation		
Run several cycles		
Confirm correct operation		Including correct fill levels
Operator training		

Confirm Operator has copy of Operator Manual and is familiar with procedures

Start-up	
Pre-rinse and racking	
Machine operation	
Drain	
Clean	
Shut-down	

Model / Serial	
Owner	
Location	
Technician	
Date	
Signed	

Dishwashing Procedures

for best results

Note : these are general instructions to assist in getting the best performance from Washtech dishwashers – some comments and / or illustrations may not apply to every unit.

Installation

Read the Operator Manual. Correct installation, including an adequate supply of water at the correct temperature and pressure is essential for effective operation of your machine. Refer installation instructions for details. Drain hose outlet height is important on some models. Always install on a sound self-draining floor. Water softening is recommended in hard water areas - especially for glasswashing

Pre-rinsing

Pre-scraping of dishes is required by hygiene regulations. The best method is to pre-rinse with a pre-rinse spray unit - or alternatively by scraping or dunking in water.

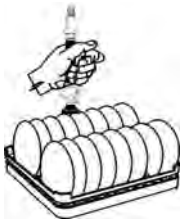

Cutlery Procedures

Pre-soak cutlery in warm water, preferably containing cutlery pre-soak compound - refer your chemical supplier.

Do not overfill cutlery containers. Cutlery should be loose with handles down. Sort after washing rather than before. Cutlery of only one type nests together and obscures wash water.

Racking Procedures

Do not overload racks, minimize the overlap of crockery. Cycle times are short and water consumption per cycle low - so there is no advantage in overloading racks.

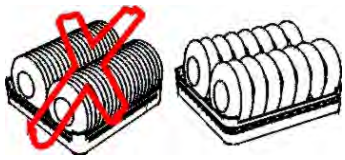

Cycle Times

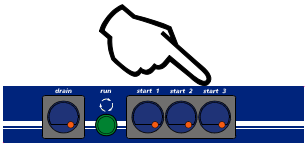

For multi-cycle machine use the longest cycle whenever possible. Note that water consumption does not increase with longer cycles. Only choose shorter, faster cycles when necessary.

Detergent

Use of correct type and quantity of low foaming commercial grade detergent is essential to the performance of the machine. We strongly recommend that you use a professional dishmachine chemical supplier - and will be pleased to recommend a supplier in your region. Discuss with them the use of cutlery pre-soak solution, detergent and drying agent.

Dishwashing Procedures

for best results

Drying

Single tank commercial dishwashers do not have a drying cycle. However, the machines do rinse at high temperatures which promote fast drying particularly when drying agents are used. We recommend prompt removal of the rack from the machine - leave the rack on the bench for 2 to 3 minutes before emptying. This time will be reduced with correct use of drying agent (rinse fluid) which reduces water surface tension and allows water to drain quickly from washware. For advice on drying agents and injectors refer to your chemical supplier.

Daily Cleaning

It is essential that the machine is drained and cleaned at the end of each day. Drain the machine then remove, clean and replace filters as per the operating instructions. Regularly check the wash and rinse jets and clean them if necessary – see below.

Regular Cleaning

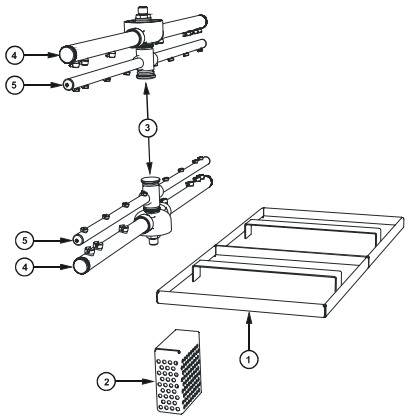

1. Remove scrap trays① and wash pump inlet filter②, where fitted, and rinse or brush clean.

2. Remove wash and rinse arms by undoing the central thumbscrews③. If necessary, remove the end cap screws④ from the wash arms and the end screws⑤ from the rinse arms and flush the arms with water and/or use a toothpick or paperclip to clear jets.

Note: arms and filters vary with model and may appear different from this illustration e.g. those models with plastic wash arms have removable jets for ease of cleaning

Regular Servicing

Regular servicing of the dishwasher is absolutely essential to keep the machine in top working condition and obtain the best performance.

Please contact Moffat or your Authorised Service Provider to organize regular servicing of the dishwasher - discuss a Preventative Maintenance Agreement for optimum performance and long machine life.

Note : these are general instructions to assist in getting the best performance from Washtech dishwashers – some comments and / or illustrations may not apply to every unit.

Operating Instructions

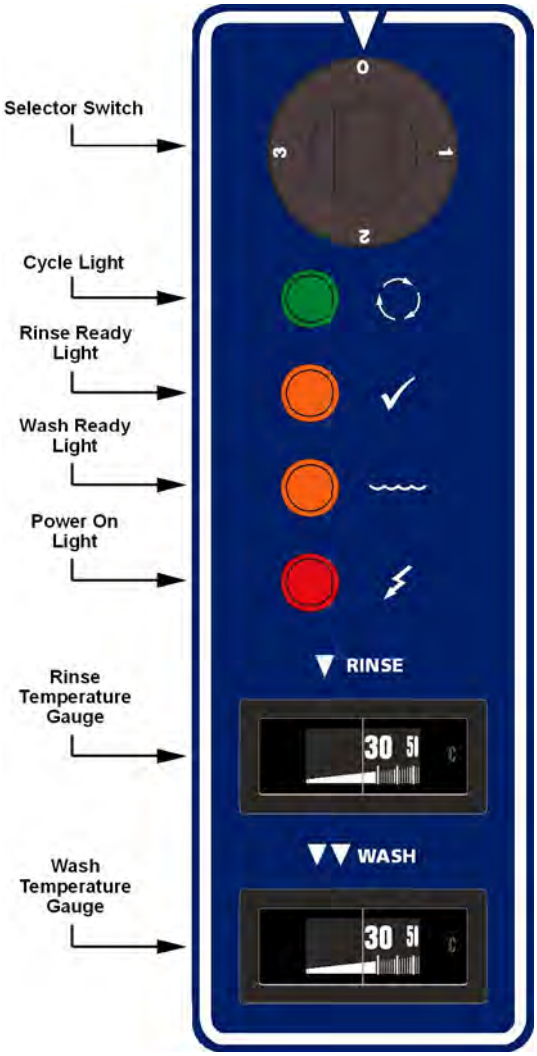

Start up

Fit drain upstand, wash pump filter, scrap tray and shut door.
Turn wall power switch on and select any cycle (1, 2 or 3).
Power light glows red and machine fills automatically.
Wash Ready light (water symbol) glows amber when wash tank is ready.
Rinse Ready light (tick symbol) glows amber when the machine is up to required temperature and ready to run.

Operation

Select required cycle (1, 2 or 3 for 40, 60 or 90 seconds cycle accordingly).
Try cycle 3 initially and switch to faster cycles only if necessary.
Load rack into machine and close door to start the machine.
Cycle light glows green while machine operates.
When Cycle light goes out, cycle is complete.
Open door and remove rack.

NOTE: Machine will not operate unless Ready lights are on.

After removing rack from machine, DO NOT shut door as machine will start up again.

Shut down every night

Standard machine without Drain Pump
Turn machine and wall power switches off.
Remove drain upstand to drain wash tank.
Remove scrap tray and wash pump filter and rinse clean.
Replace drain upstand, filter and scrap tray.

Drain Pump fitted
Open the door and turn Drain switch on.
After drain starts remove drain upstand when the top of the upstand is above the surface of the water.
Allow to drain for approximately 1 minute.
Turn Drain and Power switches off.
Remove scrap trays, filter and rinse clean. Replace filters and drain upstand.

AL-3 (W) SCHEMATIC DIAGRAM

010148 17/01/11 1 D

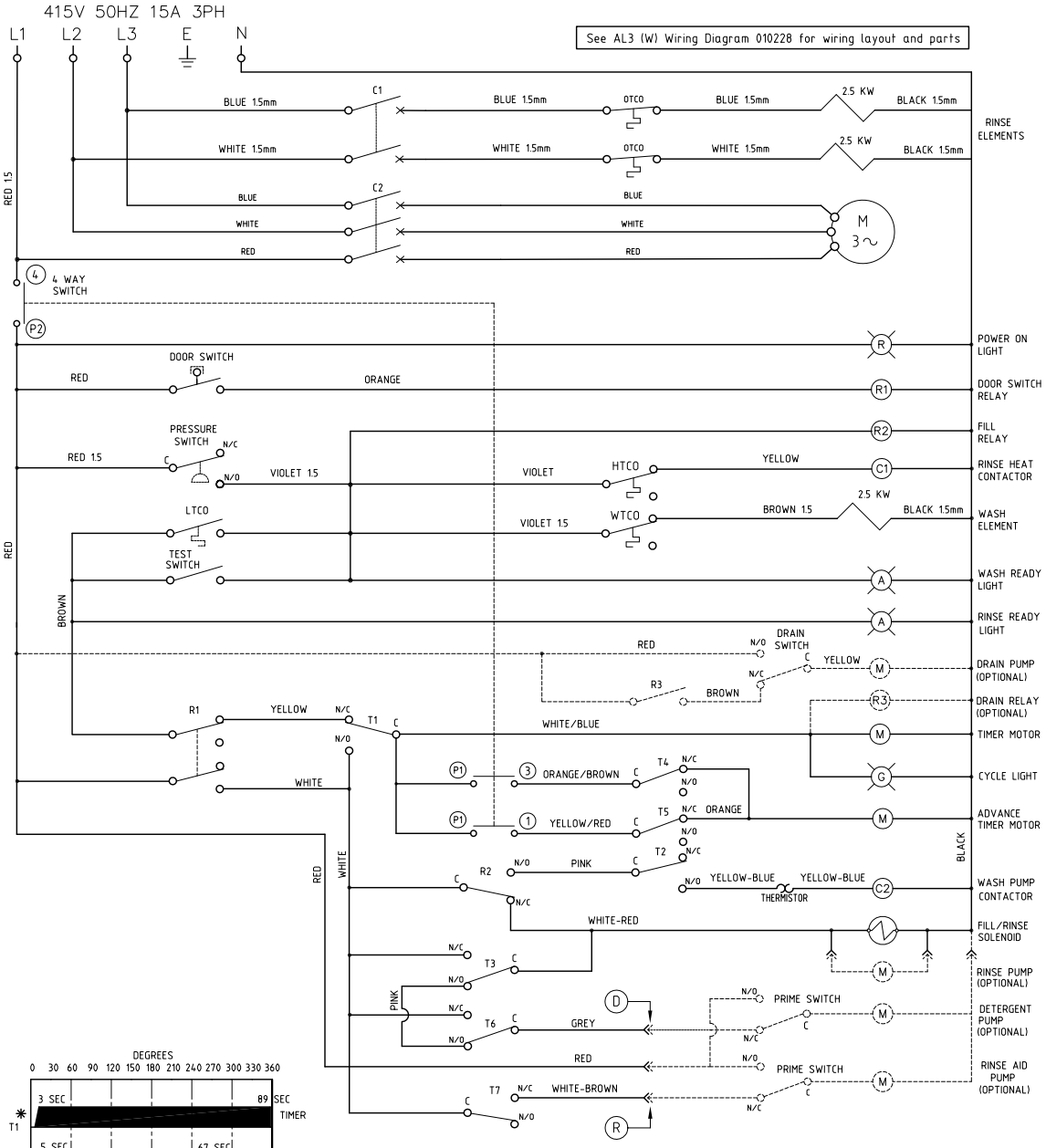

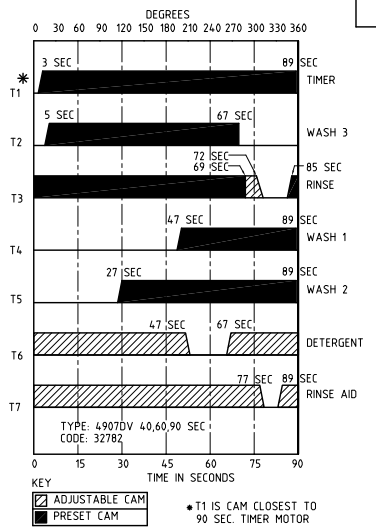

DETERGENT AND RINSE AID CONNECTION OPTIONS

1. Cycle active feed

   - refer main terminal block for all connections

2. Timer cam controlled feed

   - Main Power Active - refer main terminal block
   - Neutral - refer main terminal block
   - Earth - refer main terminal block
   - Detergent Active - refer D - connection wire provided
   - Rinse Aid Active - refer R - connection wire provided

For rinse aid injection. Washtech part # C620120 is recommended and operates hydraulically.

Date	Change	Issue
3-12-10	ADD RELAY FOR OPTINAL DRAIN PUMP	1-D

Information supplied in this manual is copyright. No part of this work may be reproduced or copied in any form or by any means, electronic or mechanical without the express permission of the author / publisher.

Distributed In Australia by
MOFFAT®
Service 1 800 622 216
Parts 1 800 337 963
740 Springvale Road, Mulgrave 3170, Victoria, Tel 03 9518 3888 Fax 03 9518 3818