WASHTECH

PROFESSIONAL WASH SYSTEMS

CD100 OPERATOR MANUAL

Distributed in Australia by MOFFAT

Service 1 800 622 216
Parts 1 800 337 963

740 SpringvaleRoad, Mulgrave 3170, Victoria, Tel 03 9518 3888 Fax 03 9518 3818

CD100

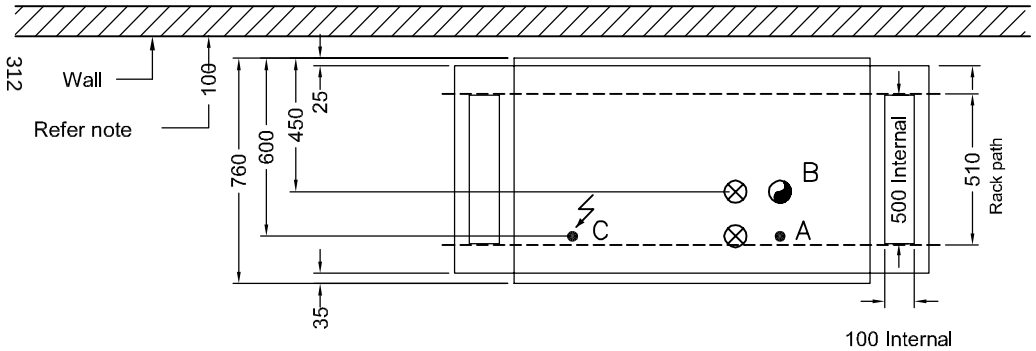

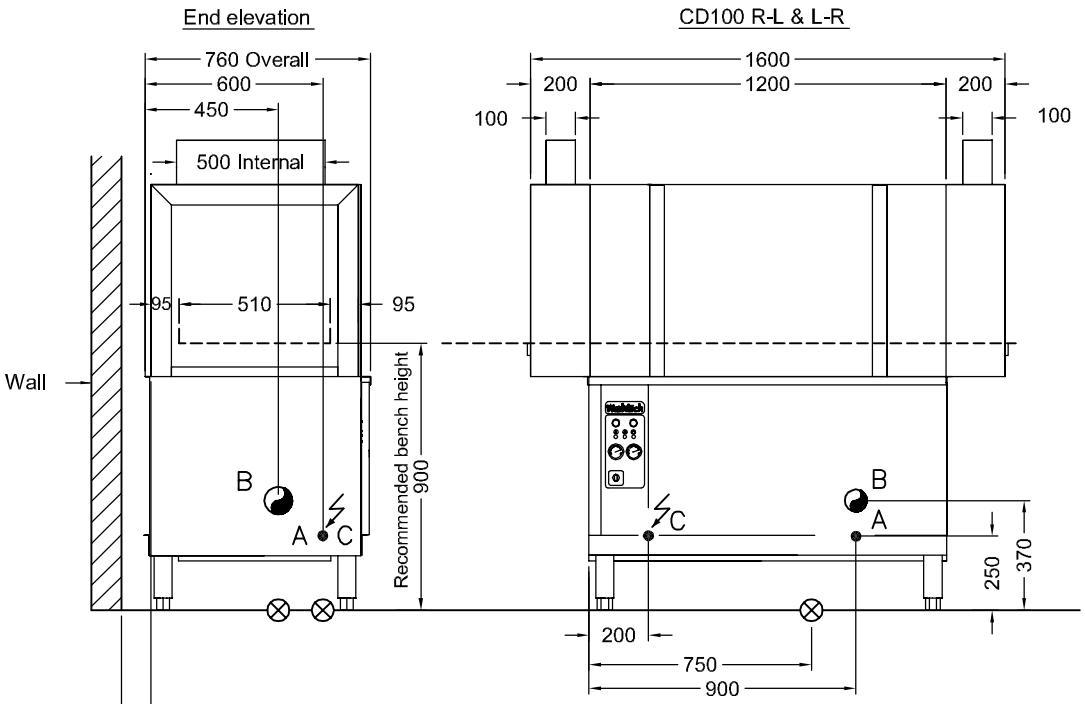

Recommended minimum of 100mm in which case all services can be located centred 50mm off wall, and bench depth = 750mm. Gap to wall may be reduced to 50mm and bench to 700mm but services must then come through floor in adjacent location as shown.

CD100 INSTALLATION

Installation personnel must be suitably qualified and ensure compliance with all codes and standards.
Install machine on sound self-draining floor and use adjustable feet to level machine.
Bench work detail drawing available on request

Allow room for detergent to one side of machine or in adjacent cupboard. 20 litre containers require approx 450H x 250W x 350D but smaller containers are available from many suppliers.

A. WATER SUPPLY - HOT

Temperature	- 65 +/- 5 degrees C
Pressure	- 200-400kPa = 30-60Psi recommended.
Consumption	- 300 litres per hour approx.
Connection	- 20mm (3/4" BSP Male). FLUSH SUPPLY LINE before connection (point A on drawing

B. WASTE

40mm - refer point B on drawing. Direct waste pipe behind machine or through open area in base.

C. POWER

Must be 5 Wire 3 Phase, Neutral + earth 400/415V 25A/Ph 50Hz permanent wiring required via wall switch adjacent to machine.

DETERGENT

Refer your professional chemical supplier for advice on wash and rinse chemicals and dispensers.

COMMISSIONING PROCEDURES:

Connect all services as above. Ensure that all internal machine components such as filter and drain upstand are in place. Turn on water and switch on power. Close machine door and switch machine on, machine will fill. When water sprays from rinse arms inside machine, switch machine off at wall.
Remove lower front panel and switch commissioning switch by breaking label over same.
Check rotation of wash pump and alter supply phase connections if necessary to achieve correct rotation.
Close panel and switch machine on. Machine is now ready for use - refer operating instructions.

⊗ Shows recommended floor penetration position for waste and supply - in line with end elevation. Recommended minimum waste pipe, 2" BSP = Ø50mm

© WASHTECH® PROFESSIONAL WASH SYSTEMS
414 ROSEBANK ROAD, AUCKLAND, NEW ZEALAND
PO Box 90-548
Tel (09) 829-0930 Fax (09) 829-0930

Description:	CHECKED BY	ISSUE NO.	Rev.	Issue Date:	Drawing No:
WASHTECH CD100 INSTALLATION DETAIL		1	C	20-12-01	CD100

DO NOT SCALE - IF IN DOUBT ASK DWG SIZE A3 (390x265) SPECIFICATION SUBJECT TO CHANGE WITHOUT NOTICE.

WASHTECH

PROFESSIONAL WASH SYSTEMS

Safe Installation and Use of Wash Equipment

As with all electrical and mechanical equipment dishwashing equipment can be hazardous if installed or operated incorrectly.

Installation

- ✓ Use qualified, skilled personnel
- ✓ Follow installation instructions
- ✓ Connect to correct voltage and supply current
- ✓ Provide fully accessible Electrical Isolation Switch

Training and Supervision

- ✓ Read and Understand the Operating instructions
- ✓ Train all staff.
- ✓ This appliance is not intended for use by young children.
- ✓ Young Children should be supervised to ensure they do not play with the appliance.
- ✓ This appliance is not intended for use by infirm persons without supervision

Hot Surfaces

- ✓ Be aware some surfaces can be hot.

Chemicals

- ✓ Commercial dishwashing detergents are hazardous
- ✓ Read and follow the safety information found on the labels of detergent containers and Material Safety Data Sheets
- ✓ Handle with care
- ✓ Use protective eyewear and clothing if decanting containers

Hot Water

- ✓ Door safety switches are designed for emergency use only.
- ✓ **WAIT** for the green cycle light to go out before opening the door.
- ✓ Wash water is 60°C and contains caustic detergent so **DO NOT** put hands in wash water.

Cleaning

- ✓ **DO NOT** hose down the machine or splash water over the exterior.
- ✓ Watch for broken glass etc when cleaning the inside of the machine especially with glasswashers..

For further information on any of the above contact

GROUP

Distributed in Australia by MOFFAT

Service 1 800 622 216
Parts 1 800 337 963

740 SpringvaleRoad, Mulgrave 3170, Victoria, Tel 03 9518 3888 Fax 03 9518 3818

WASHTECH CD 100

OPERATING INSTRUCTIONS

START UP

Fit drain upstand, wash pump inlet filter and scrap trays.
Shut door. Turn main switch ON - RED power light illuminates and machine fills.
When machine is full, filling automatically stops.

OPERATION

Press START button to commence operation.
When AMBER ready light is illuminated racks can be fed into the machine.

> Note: Conveyor will not operate unless AMBER ready light is illuminated (i.e. machine is up to required temperature).

SHUT DOWN - IMPORTANT - EVERY NIGHT

Press STOP button.
Turn machine switch off.
Remove scrap trays and rinse clean.
Remove drain upstand to drain wash tank.
Remove wash pump inlet filter and rinse clean.
Replace drain upstand, filter and scrap trays.

We recommend regular removal and flushing of wash and rinse arms.
To remove wash arm assembly, lift to unhook and then withdraw.
To remove rinse arms, twist and withdraw.
Flush arms with water using a toothpick to clear jets, if necessary.
Refitting is the reverse of the removal procedure.

Use of correct type and quantities of detergent is essential to the effective operation of this machine. Alow foam specialty product is recommended.

For information on recommended detergent suppliers or local service agents, contact:

REV 1B
13/3/98

Distributed in Australia by MOFFAT
Service 1 800 622 216
Parts 1 800 337 963
740 SpringvaleRoad, Mulgrave 3170, Victoria, Tel 03 9518 3888 Fax 03 9518 3818

GETTING THE BEST RESULTS FROM YOUR DISHWASHER

1. Hot Water Supply

An adequate supply of water at the correct temperature and pressure is essential for effective operation of your machine. An inadequate hot water supply will result in significant time delays between operating cycles. Refer Installation information for detail. Water softening is recommended in hard water areas - especially for glasswashing.

2. Pre-rinsing

Pre-scraping of dishes is required by Food Hygiene Regulations. The best method is to pre-rinse with warm water with a Fisher Pre-rinse Unit - or alternatively by scraping or dunking in water. Cutlery should be pre-soaked in warm water, preferably containing cutlery pre-soak compound - refer your chemical supplier.

3. Racking Procedures

Do not overload racks or cutlery containers, minimise the overlap of crockery. Cycle times are short and water consumption per cycle low - so there is no advantage in overloading racks.

4. Cycle Times

With multi-cycle machines select cycle 3 initially and switch to faster cycles only if necessary. Note that water consumption does not increase with longer cycles. For best results use the longest cycle whenever possible.

5. Detergent

Use of correct type and quantity of detergent is essential to the performance of the machine. Low foam specialty products are recommended. We strongly recommend that you use a professional dishmachine chemical supplier - and will be pleased to recommend a supplier in your region. Discuss with them the use of cutlery pre soak solution, detergent and drying agent.

6. Drying

Single tank commercial dishwashers do not have a drying cycle. However, the machines do rinse at high temperatures which promote fast drying particularly when drying agents are used. We recommend prompt removal of the rack from the machine - leave the rack on the bench for 2 to 3 minutes before emptying. This time will be reduced with correct use of drying agent (rinse fluid) which reduces water surface tension and allows water to drain quickly from washware. For advice on drying agents and injectors refer to your chemical supplier.

7. Daily Cleaning

It is essential that the machine is drained and cleaned at the end of each day. Drain the machine then remove, clean and replace filters as per the operating instructions. Regularly check the wash and rinse jets. Remove wash and rinse arms by undoing the central thumbscrew. (DO NOT remove the thumbscrew retainer plate if fitted). Flush arms with water and use a toothpick or paperclip, if necessary, to clear jets. On some models individual jets can be removed for cleaning by twisting anticlockwise. To remove the end plugs on these arms first remove the end jet then withdraw end plug. To flush the machine, leave the drain upstand out, close the door and switch the machine on for about 20 seconds. DO NOT leave the machine unattended during this process.

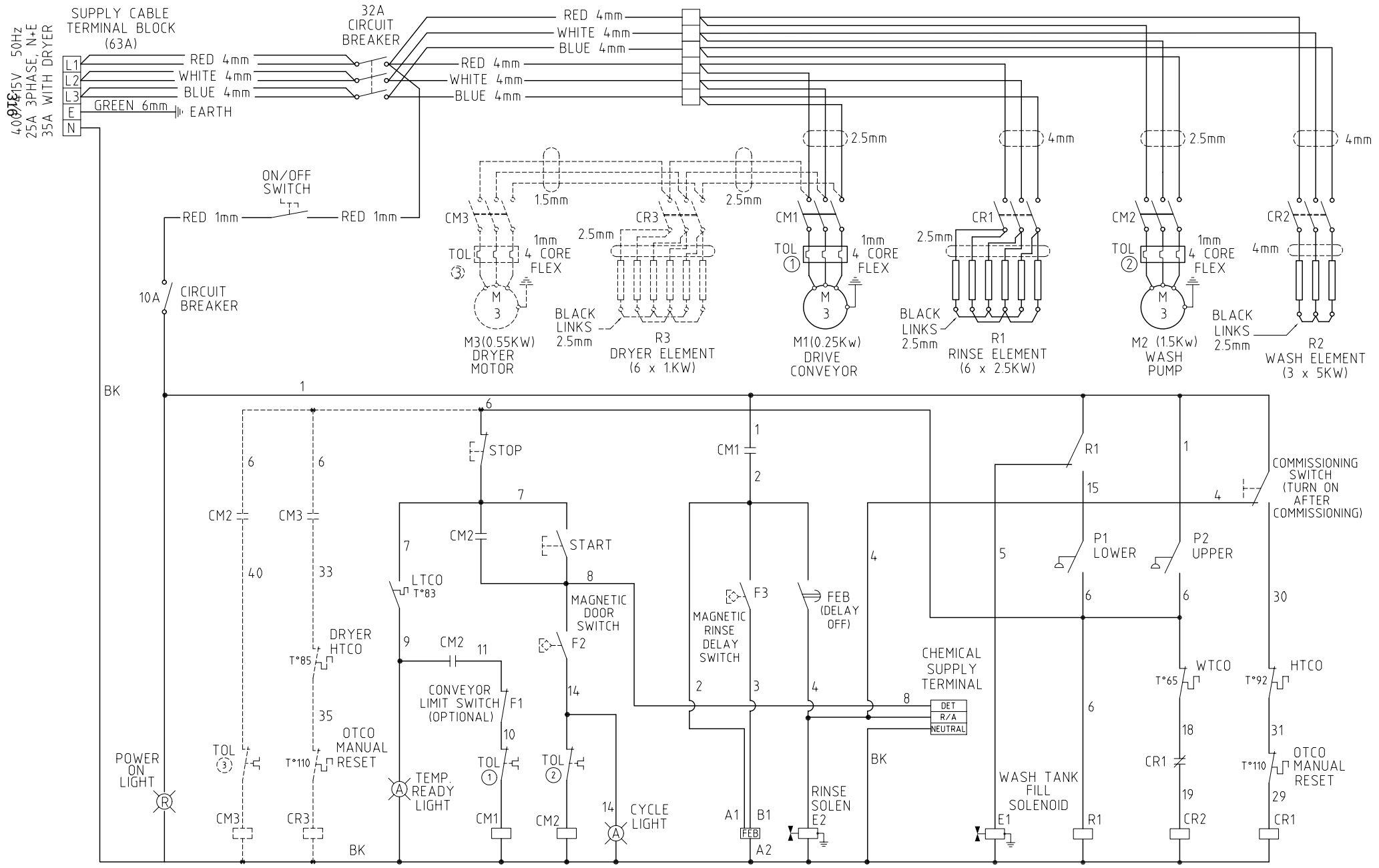

* CONTROLS USE ALL WHITE WIRE OR WHITE\STRIPED WIRE UNLESS OTHERWISE SHOWN

Date	Change	Issue
07-04-05	CHANGE WASH ELEMENT, ADD PRESSURE SWITCH	1-S

© WASHTECH® PROFESSIONAL WASH SYSTEMS
414 ROSEBANK ROAD, AUCKLAND, Tel (09) 829-0930
PO Box 90-548 NEW ZEALAND Fax (09) 829-0930

Description:	CHECKED BY	ISSUE NO.	Rev.	Issue Date:	Drawing No:
CD100 (III) SCHEMATIC DIAGRAM		1	S	07-04-05	250116

DO NOT SCALE - IF IN DOUBT ASK DWG SIZE A3 (390x265) SPECIFICATION SUBJECT TO CHANGE WITHOUT NOTICE.

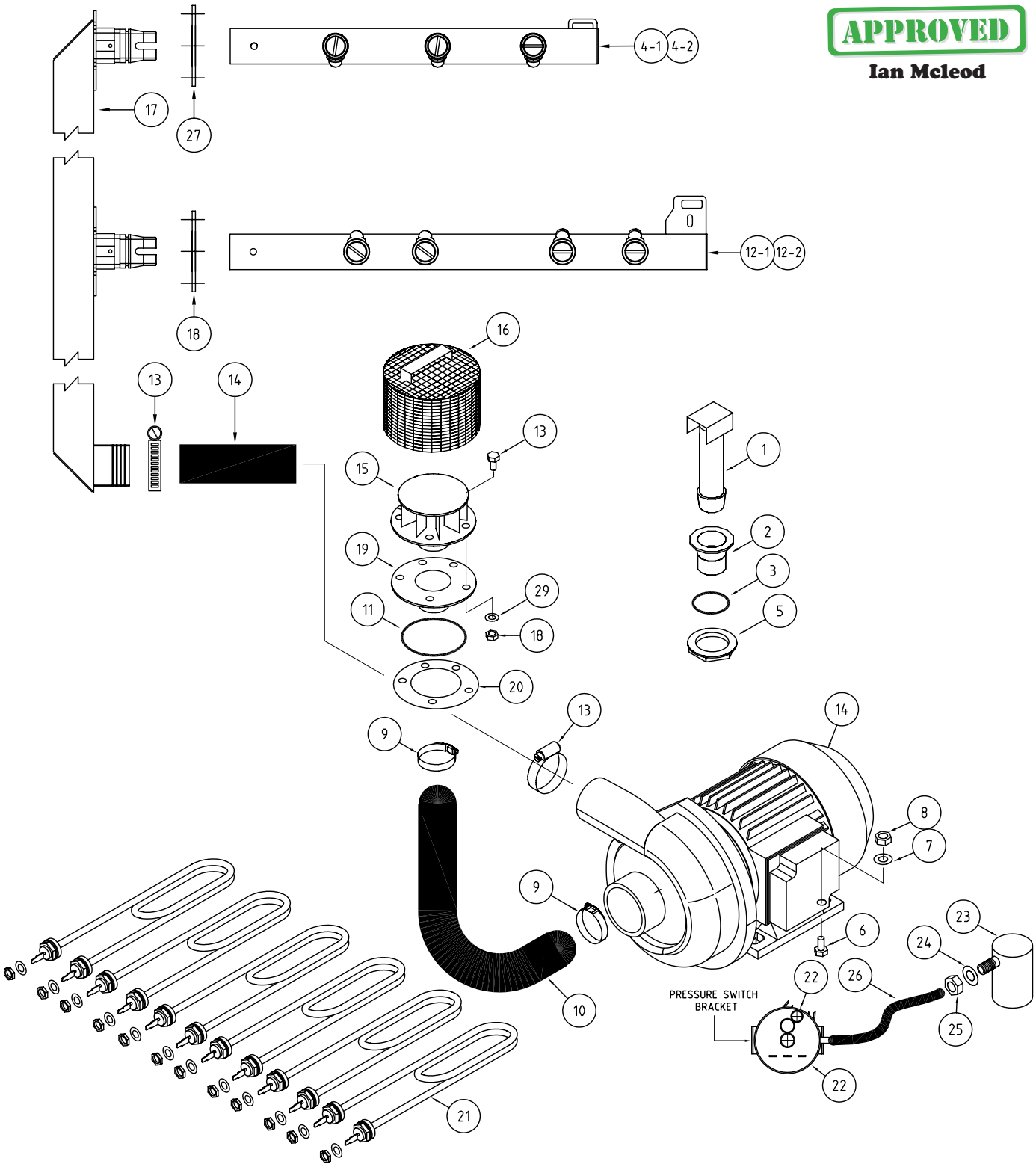

APPROVED
Ian Mcleod

ITEM	CODE	DESCRIPTION	QTY
1	830 10077	ASSY CD100/150 DRAIN UPSTAND	1
2	400 30042	WASTE DRAIN PLASTIC 40mm WTECH	1
3	1896	GASKET 40mm DRAIN WASTE	1
4-1	835 10011	L-R UPPER WASH ARM	1
4-2	835 10012	R-L UPPER WASH ARM	1
5	6037	BACKNUT 126 X 40mm	1
6	600 80021	MS Hx SS 304 M8 x 25	4
7	8568	WASHER SPRING SS 304 M8	4
8	600 80023	NUT SS 304 HGX M8	4
9	ASS44	HOSECLIP ASS44	2
10	C200359	HOSE C34 WASH INLET	1
11	ARP245	'O' RING ARP245	1
12-1	835 10010	R-L LOWER WASH ARM	1
12-2	835 10013	L-R LOWER WASH ARM	1

ITEM	CODE	DESCRIPTION	QTY
13	ASS36	HOSECLIP ASS36	2
14	3906	2HP WASH PUMP	1
15	C191012	VORTEX BREAKER S/SE	1
16	350 10013	FILTER AL WASH INLET (W/O!!)	1
17	830 10049	ASSY CD100 WASH MANIFOLD	1
18	835 90006	CD WASH MANIFOLD FLANGE	2
19	C180207	FLANGE - SUCTION C34	1
20	C180204	COUNTERFLANGE D.130 SUCT. N S	1
21	600 30095	WASH ELEMENT 3KW-STRAIGHT- TERMINAL.	6
22	130605C	SWITCH PRESSURE 50-30 1 LEVEL	1
23	C161301	AIR TRAP F2 C34-F45	1
24	400 90010	GASKET 10x19x.8 CAF	1
25	600 80009	NUT SS304 HEX M10	1
26	3067	PRESSURE SWITCH HOSE x 150mm LONG	1

© WASHTECH®
PROFESSIONAL WASH SYSTEMS
414 ROSEBANK ROAD, AUCKLAND, Tel (09) 829-0930
PO Box 90-548 NEW ZEALAND Fax (09) 829-0930

ISSUE NO. 1	Rev. B	Description: ASSY CD100 WASH SYSTEM	Scale NTS	Units: mm	Proj:	Tolerance: REF	Checked by:	Approved by:
Issue Date: 02-12-08			FINISH:					
Drawn by: B.A.E			Material:				Sheet No.	

Drawing No: CD100 002

DO NOT SCALE - IF IN DOUBT ASK DWG SIZE A3 (390x265)

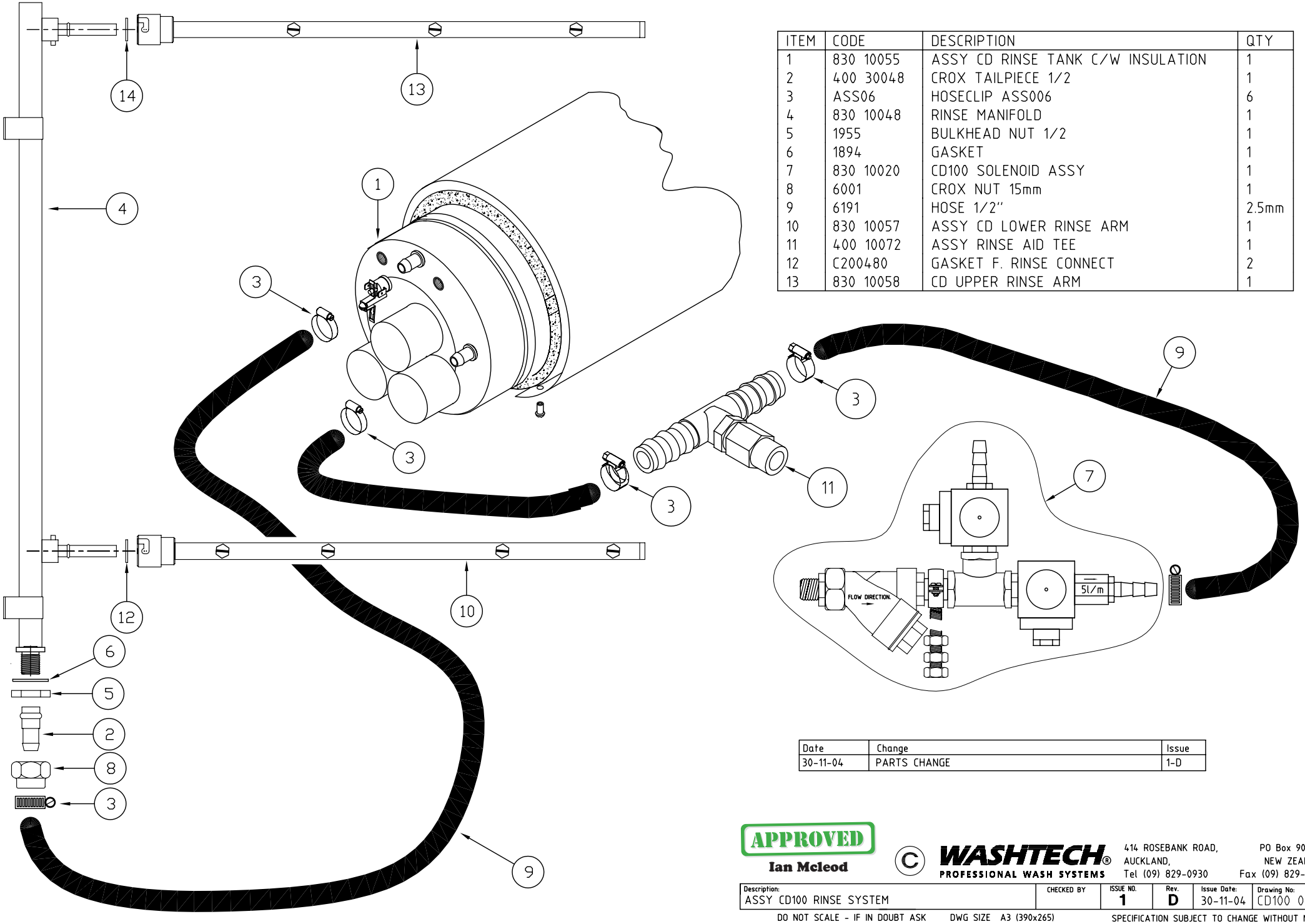

ITEM	CODE	DESCRIPTION	QTY
1	830 10055	ASSY CD RINSE TANK C/W INSULATION	1
2	400 30048	CROX TAILPIECE 1/2	1
3	ASS06	HOSECLIP ASS006	6
4	830 10048	RINSE MANIFOLD	1
5	1955	BULKHEAD NUT 1/2	1
6	1894	GASKET	1
7	830 10020	CD100 SOLENOID ASSY	1
8	6001	CROX NUT 15mm	1
9	6191	HOSE 1/2"	2.5mm
10	830 10057	ASSY CD LOWER RINSE ARM	1
11	400 10072	ASSY RINSE AID TEE	1
12	C200480	GASKET F. RINSE CONNECT	2
13	830 10058	CD UPPER RINSE ARM	1

Date	Change	Issue
30-11-04	PARTS CHANGE	1-D

APPROVED
Ian Mcleod

©

WASHTECH®
PROFESSIONAL WASH SYSTEMS
414 ROSEBANK ROAD,
AUCKLAND,
Tel (09) 829-0930
PO Box 90-548
NEW ZEALAND
Fax (09) 829-0930

Description:	CHECKED BY	ISSUE NO.	Rev.	Issue Date:	Drawing No:
ASSY CD100 RINSE SYSTEM		1	D	30-11-04	CD100 001

DO NOT SCALE - IF IN DOUBT ASK DWG SIZE A3 (390x265) SPECIFICATION SUBJECT TO CHANGE WITHOUT NOTICE.

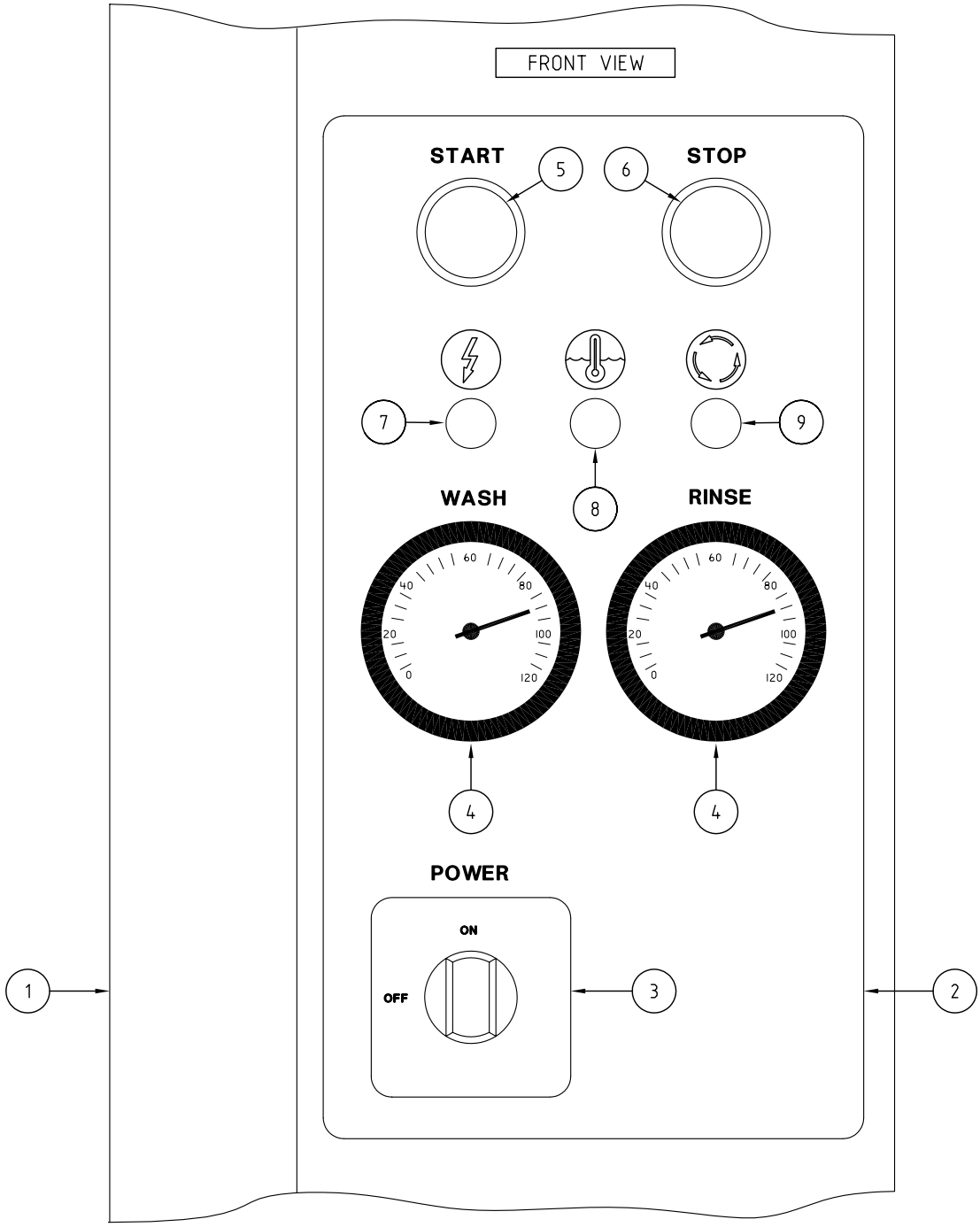

ITEM	CODE	DESCRIPTION	QTY
1	835 20027	CONTROL PANEL CD100/150	1
2	830 70001	LABEL CD CONTROL	1
3	600 30166	SW 12A 0-1 1 POLE 194LE121751	1
4	3500	TEMP GAUGES	2
5	3075	GREEN START PUSH BUTTON	1
6	600 30103	RED STOP PUSH BUTTON	1
7	600 30161	LENS & NEON ASSY (RED) 12mm	1
8	600 30162	LENS & NEON ASSY (AMBER) 12mm	1
9	600 30163	LENS & NEON ASSY (GREEN) 12mm	1

APPROVED
Ian Mcleod

© WASHTECH®
PROFESSIONAL WASH SYSTEMS
414 ROSEBANK ROAD, AUCKLAND, Tel (09) 829-0930
PO Box 90-548 NEW ZEALAND Fax (09) 829-0930

ISSUE NO. 1	Rev. B	Description: ASSEMBLY CD100 CONTROL PANEL	Scale NTS	Units: mm	Proj:	Tolerance: ±0.5 ±1.0°	Checked by:	Approved by:
Issue Date: 02-12-04			FINISH:					
Drawn by: B.A.E			Material: AS SPECIFIED				Sheet No.	

Drawing No: 835 10006

DO NOT SCALE - IF IN DOUBT ASK DWG SIZE A3 (390x265)