## Undercounter dishwasher - up to 40 racks, 720 plates / 1,440 glasses / hour

- **Fine filter GENIUS-X²:** up to 40% more removal of food soil
- **Rinse pump ACCURINSE** guaranteed rinse volume independent of site pressure
- **SMARTRONIC single button operation** with colour coded status and indication of remaining cycle time NEW
- Low 2.5litres per cycle water consumption
- **Patented wide angle FAN wash nozzles** distribute wash water evenly around the wash chamber
- **High quality** rinse aid and detergent dispensers with **ZERO LEVEL CHEMICAL SENSORS** NEW
- **SELF-CLEANING** cycle
- **Hygiene program ACTIVE and hygiene tab INTENSIVE:** removes calcium carbonate and other deposits from tank wall NEW
- Deep drawn tank, door and rack slides for maximum hygiene
- 240/50/1 - machine comes with single phase plug and lead
- **"Connect & use"** - Includes chemical dispensers with, fill and drain hoses, power cord, non-return valve and drain pump.
- Supplied with 1 plate& 1 flat rack, plus cutlery basket
- Back flow prevention device as standard to meet Watermark Approval and ATS 5200.101

### Technical Data

| | |
|---|---|
| 1. flexible drain hose 2000mm | Pump-out drain standard |
| 2. fresh water connection: pressure hose 2000mm<br>flow pressure<br>Incoming water temperature | Connection size: 3/4" BSP<br>50-1000kPA<br>55-65°C |
| 3. power cord | 15amp single phase plug & lead |
| 4. hose for detergent<br>5. hose for rinse aid | 2500mm each |
| cycle times | 90 sec.<br>180 sec.<br>300 sec. (fill & dump) |
| water consumption | 2.5litres |
| tank capacity | 10.8 litres |
| tank heating | 0.8kW |
| power supply | 240/50/1 - 15amp |
| booster loading | 2kW |
| total loading | 2.9kW |
| pump capacity | 0.6kW |
| noise emmission | 63dB(A) |
| loading height | 425mm |

Water hardness should not exceed 3°dH, if higher we recommend using a water softener.

If mineral content is high a demineraliser may be advisable.

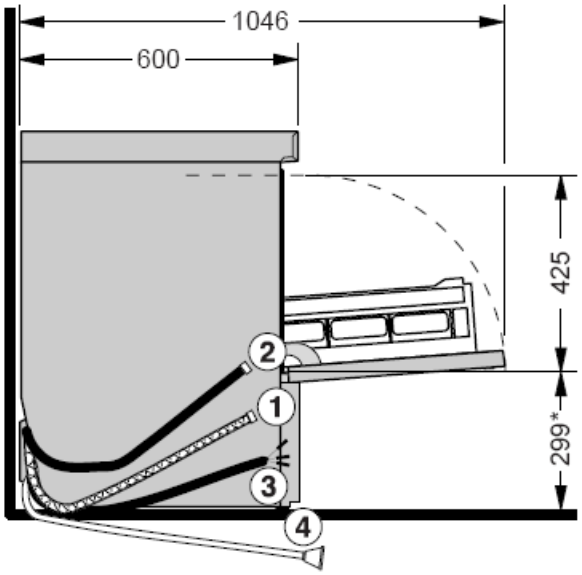


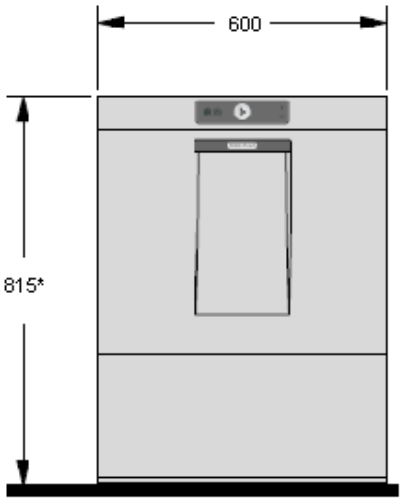


* = + 30mm for adjustable feet