Culinaire

Technical Data Sheet

CR.GC1.L.RC.L

Glass Chiller - Single Door Lift Off Lid

RH Service Compartment - LH Hinged door

Product Information:

- Adjustable runners to hold 14” x 17” or 14” x 14” glass baskets. (baskets not included)
- Aluminum framed, low energy, double glazed, toughened glass doors, are self-closing and self-sealing to ensure ease of operation
- Full height, ergonomic door handle
- Full length, refrigeration system mounted on rear wall provides even, fan forced cooling and effective air temperature control
- Digital temperature controller for accurate and easy to read display
- Robust construction from 304 grade stainless steel with a No.4 finish
- Right hand or left hand service compartment options
- Right hand or left hand hinged door
- Lift off or sliding lid options
- Supplied with a service compartment for connection to a remote condenser unit to be supplied separately and connected by a qualified refrigeration contractor and electrician
- Condensate is to be plumbed to waste

Product Code:

CR	= Culinaire Refrigerated
GC1	= Glass Chiller - Single Door
L	= Lift Off Lid
RC	= Remote Service Compartment
L	= Left Hand Hinged

Technical Data:

Dimensions: W x D x H:	760 x 668 x 880
Cutout Dimensions:	375 x 437
* Remote Refrigeration Load:	350 Watts -10°C SST
Refrigerant Type:	R507 or 404A
Pipe Connection Inlet	1/2”
Pipe Connection Outlet	1/4”
Total Connected Load:	0.4kW
Electrical Connection:	240V 1Ø + N + E

Note: Refrigeration load is calculated at the cabinet

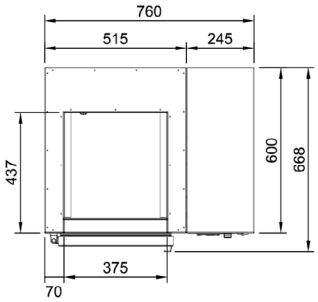

Plan View

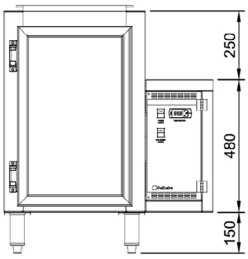

Front Elevation

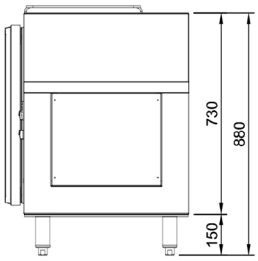

End Elevation

Proudly Manufactured in Australia

Due to continuous product research and development, the information contained herein is subject to change without notice

Manufactured By:
Tom Stoddart Pty Ltd. ABN 16 009690251
39 Forest Way, Karawatha 4117 Queensland Australia
Tel : +61 7 3440 7600 Fax : +61 7 33441000
Web site: www.stoddart.com.au

STODDART®