Operating instructions

Chest freezer

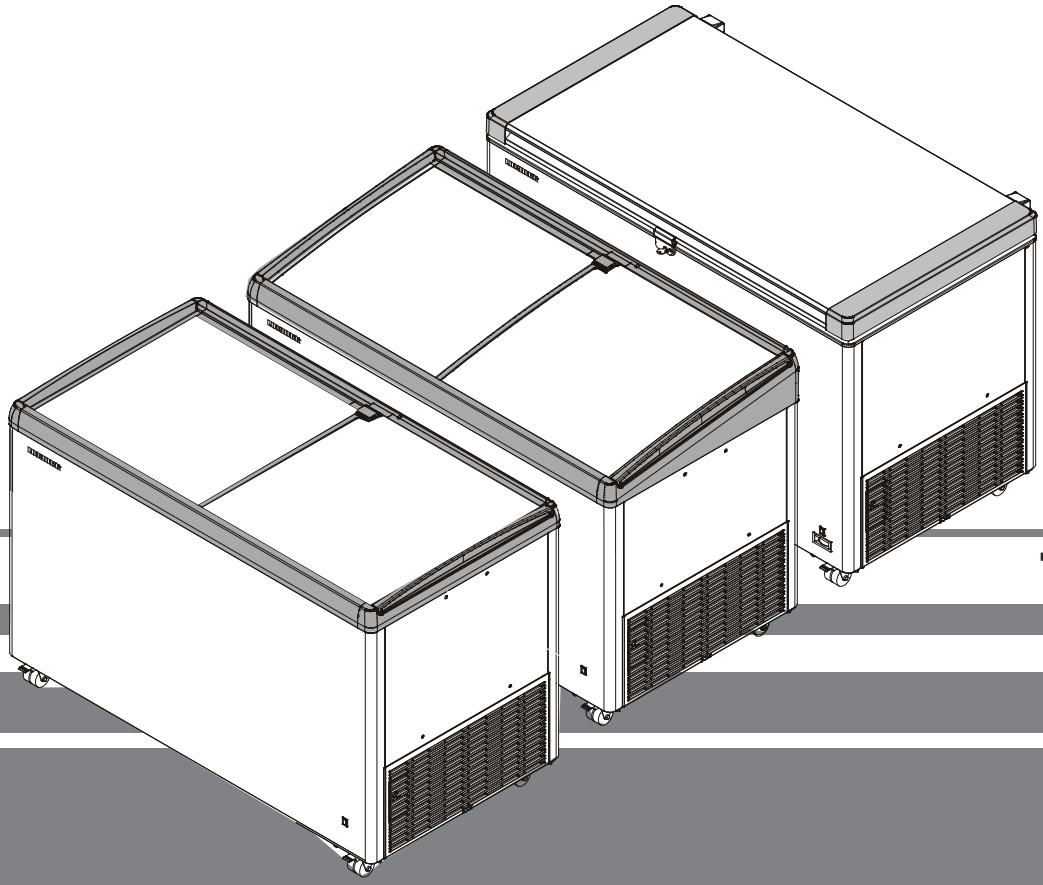

7084 790-01

EFE EFI EFL

Disposal notes

The packaging is made of recyclable materials.

- Corrugated board/board
- EPS moulded parts
- Polythene sheets
- Polypropylene straps

- Keep packaging materials away from children - polythene sheets and bags can cause suffocation!
- Please return the packaging to an official collection point.

Your old appliance: This contains some reusable materials and should be disposed of properly - not simply with unsorted household refuse.

- Discarded appliances should be disabled: Remove the plug, cut through the connection cable and render the catch unusable so that children cannot become trapped inside.
- Ensure that the refrigerant circuit is not damaged when the appliance that is no longer needed is taken away for disposal.
- Details of the refrigerant can be found on the type plate.
- Appliances which are no longer needed must be disposed of in a professional and appropriate way, in accordance with the current local regulations and laws.

Safety instructions and warnings

- To prevent injury or damage to the unit, the appliance should be unpacked and set up by two people.
- In the event that the appliance is damaged on delivery, contact the supplier immediately before connecting to the mains.
- To guarantee safe operation, ensure that the appliance is set up and connected as described in these operating instructions.
- Disconnect the appliance from the mains if any fault occurs. Pull out the plug, switch off or remove the fuse.
- When disconnecting the appliance, pull on the plug, not on the cable.
- Any repairs and work on the appliance should only be carried out by the customer service department, as unauthorised work could prove highly dangerous for the user. The same applies to changing the mains power cable.
- Do not allow naked flames or ignition sources to enter the appliance. When transporting and cleaning the appliance ensure that the refrigerant circuit is not damaged. In the event of damage, make sure that there are no ignition sources nearby and keep the room well ventilated.
- This appliance is not intended for use by persons (including children) with reduced physical, sensory or mental capabilities or lack of experience and knowledge unless they have been given initial supervision or instruction concerning use of the appliance by a person responsible for their safety. Children should be supervised to ensure that they do not play with the appliance.
- Avoid prolonged skin contact with cold surfaces or chilled/frozen food. This could cause pain, numbness and frostbite. In the case of prolonged skin contact, protective measures should be taken, e.g. gloves should be worn.
- Do not eat ice cream, particulary ice lollies or ice cubes, immediately after taking them from the freezer compartment as there is a risk of “burning” because of the very cold temperatures.
- Do not consume food which has been stored for too long, as it could cause food poisoning.
- If you have a lockable appliance, do not keep the key near the appliance or within reach of children.
- Do not use electrical appliances inside the appliance.
- Do not connect the appliance to the supply with other equipment using an extension cable. This can cause the extension socket to overheat.

Component Description

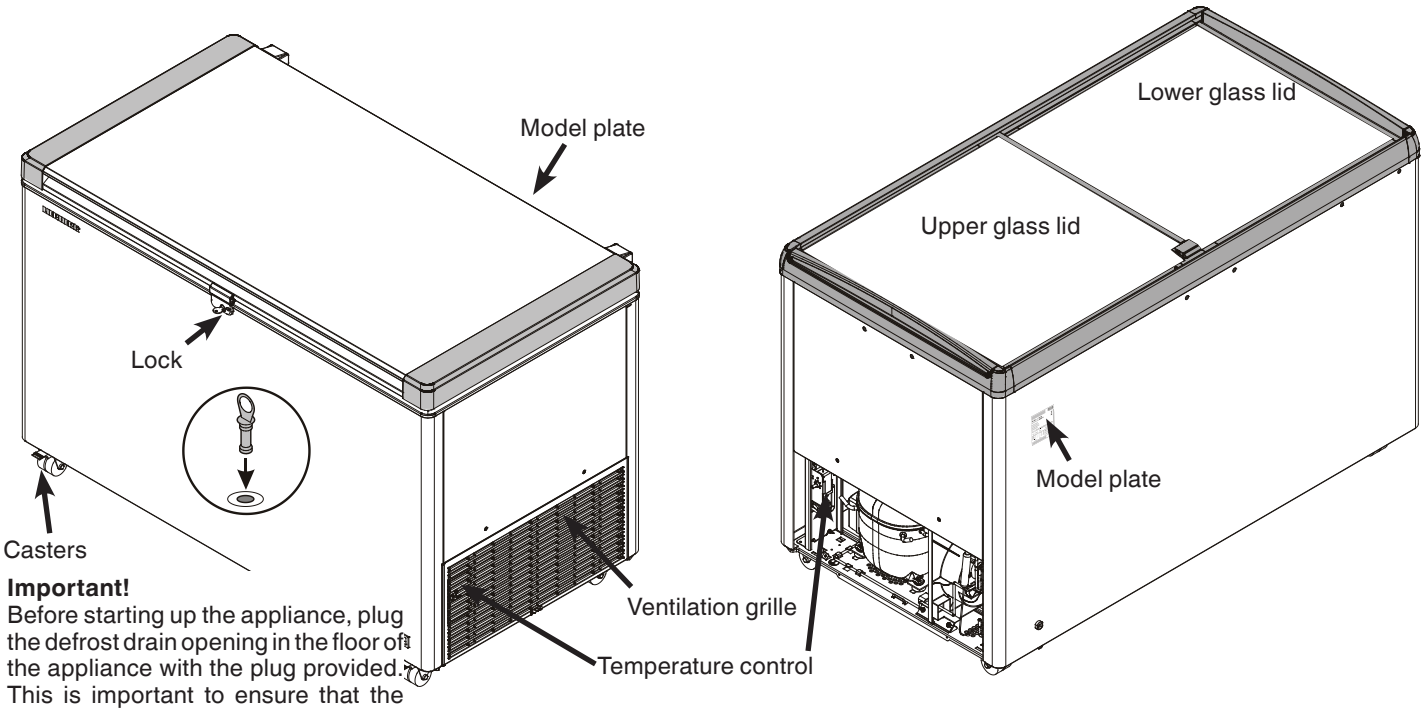

Important!
Before starting up the appliance, plug the defrost drain opening in the floor of the appliance with the plug provided. This is important to ensure that the appliance works properly.

Climate rating

The appliance is set to operate within specific ambient temperature limits according to its climate rating. These temperature limits should not be exceeded. The correct climate rating for your appliance is indicated on the type plate.

Climate rating	Ambient temperature
SN	+10°C to +32°C
N	+16°C to +32°C
ST	+16°C to +38°C
T	+16°C to +43°C

The appliance complies with the relevant safety regulations and EC directives 2004/108/EC and 2006/95/EC.

The operating instructions apply to several models. Differences may therefore occur.

Dimensions (mm)

Model	A	B	C	D
EFE 1102/1152..				
EFE 1502/1552..	825	625	660	-
EFE 2202 / 2252	825	835	660	-
EFE 3002/3052..	825	1045	660	-
EFE 3000.....	825	1045	660	-
EFE 3802/3852..	825	1255	660	-
EFE 3800.....	825	1255	660	-
EFE 4602/4652..	825	1465	660	-
EFE 6002/6052..	825	1885	660	-
EFI 1403/1453...	825	625	660	751
EFI 2103/2153...	825	835	660	751
EFI 2803/2853...	825	1045	660	751
EFI 3503/3553...	825	1255	660	751
EFI 4403/4453...	825	1465	660	751
EFI 4803/4853...	825	1681	660	751
EFI 5603/5653...	825	1885	660	751
EFL 1505.....	825	625	660	-
EFL 3005.....	825	1045	660	-
EFL 3805.....	825	1255	660	-
EFL 4605.....	825	1465	660	-
EFL 4803/4853..	825	1675	660	-
EFL 6005.....	825	1885	660	-

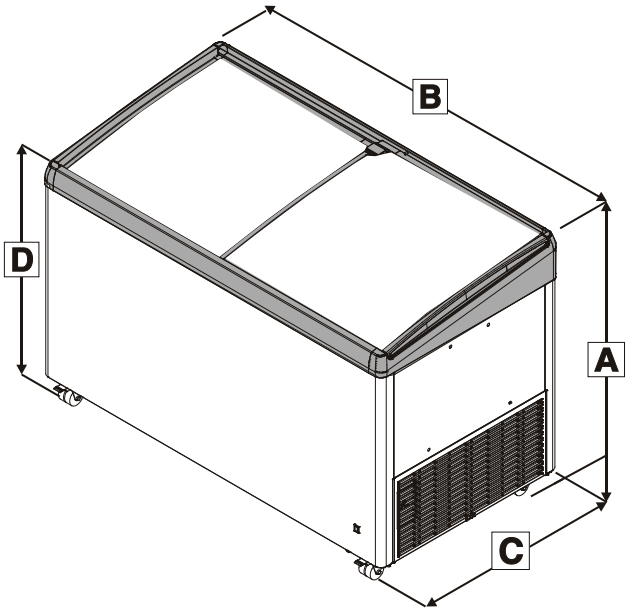

Setting up

- Avoid positioning the appliance in direct sunlight or near cookers, radiators and similar sources of heat.
- The floor on which the appliance stands must be horizontal and level.
- Do not cover the gap between the lower edge of the freezer and the floor, as the refrigeration unit has to be supplied with air for cooling.
- There must be a gap of at least 20 cm between the ventilation grille and the wall. This gap must be kept clear and the ventilation openings uncovered.
- Do not place any objects immediately next to the outer housing of the appliance. There must be a gap of at least 20 mm all round in order to ensure adequate heat discharge.

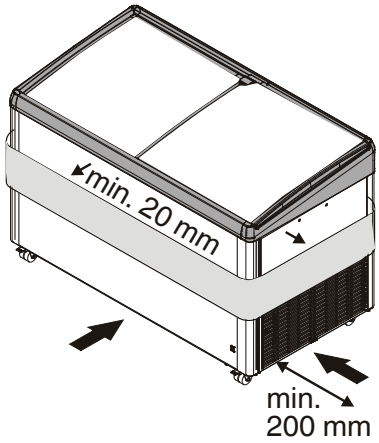

Standard EN 378 specifies that the room in which you install your appliance must have a volume of 1 m³ per 8 g of R 290a/ R 600a refrigerant used in the appliance, so as to avoid the formation of inflammable gas/air mixtures in the room where the appliance is located in the event of a leak in the refrigerant circuit. The quantity of refrigerant used in your appliance is indicated on the type plate

Connecting to the mains

Power supply (a.c.) and voltage at the operating point must comply with the details on the type plate. The type plate is located on the rear of the appliance.

The socket must be fused with a 10 A fuse or higher, it must be away from the rear of the appliance and must be easily accessible.

Connect the appliance with a properly earthed fused plug and socket only.

Switching the appliance on and off

You are recommended to clean the appliance before switching it on for the first time (see "**Cleaning**").

To switch the appliance on:
Connect the appliance to the mains - the appliance is switched on.
The green ON lamp (arrow) comes on.

To switch the appliance off:
Pull out the mains plug or remove/unscrew the fuse.

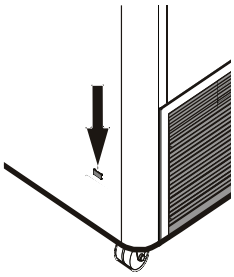

Storage

The appliance is suitable for storing ice cream and ready-frozen foods.

It must not be filled higher than the stacking mark on the inside of the freezer

Setting the temperature

Turn the arrow on the temperature control to a setting between **1** and **7**.

Setting 1 = lowest cooling setting

Setting 7 = highest cooling setting, coldest

The temperature control is in the cover grille for the compressor compartment on the right-hand side wall of the freezer.

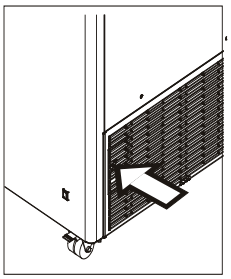

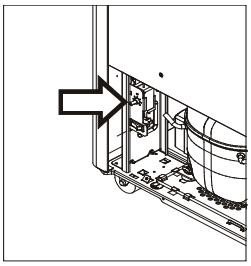

Temperature display

The thermometer shows the warmest frozen food temperature.

It is adjusted and designed so that only temperatures below 0°C are accurately displayed.

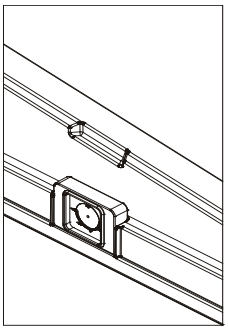

Lock (EFL)

The lock is equipped with a safety mechanism.

Locking the appliance:

1 Press the button and keep it depressed.

2 Turn the key 90°.

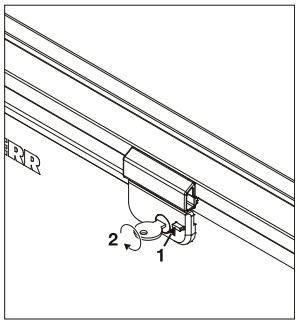

Barrel lock (EFE, EFI)

(not standard accessory)

The glass lid can be locked using barrel lock.
Open the hole cover on the lid by sliding backwards.
Place the barrel lock in the opening provided in the lid, turn the key and remove.
Remove the key and keep it safely.

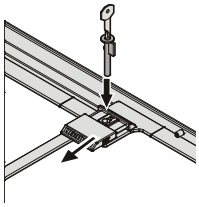

Caution :
The lock cover must always close during operation to ensure air tightness in the cabinet.

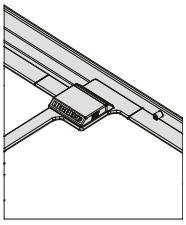

Baskets

The baskets make it easier for you to sort food.

The baskets at can be suspended in the frame of the freezer by their handles.

Shutting your appliance down

If your appliance is to be shut down for any length of time, switch it off and disconnect the plug or remove the fuse. Clean the appliance and leave the lid open in order to prevent unpleasant smells.

After decommissioning, the appliance must be stored or transported on its housing feet or castors! If not, the refrigerant circuit can become blocked.

Do not leave the appliance in direct sunlight either when it is switched on or when it is in storage - there is the risk of plastic part deformation.

Defrosting

After the appliance has been in operation for some time, a layer of frost or ice will form on the inside walls. This increases energy consumption. You should therefore defrost the appliance regularly.

- Pull out the main plug or remove/unscrew the fuse.
- Remove the frozen food and store in other units.
- Pull out the plug from the drain opening and place a tray underneath the appliance so that the defrosted water escapes through the drain opening into the tray.
- Leave the lid open while defrosting. After defrosting mop up the remaining water and clean the appliance.
- Do not forget to close the defrost drain opening.

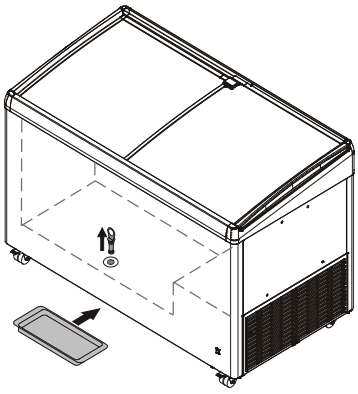

Do not use any mechanical devices or other artificial aids for defrosting other than those recommended by the manufacturer.

Malfunctions

You may be able to rectify the following faults by checking the possible causes yourself:

- Appliance does not function:
- Is the plug correctly fitted in the mains socket?
- Is the socket fuse intact?
- The temperature is not low enough:
- Is the temperature setting correct (see “Setting the temperature”)?
- Does the separately installed thermometer show the correct reading?
- Is the ventilation system working properly?
- Is the appliance set up too close to a heat source?

If none of the above causes apply and you cannot rectify the fault yourself, contact the nearest customer service department stating the type of appliance ❶, service number ❷ and appliance number ❸ as indicated on the type plate.

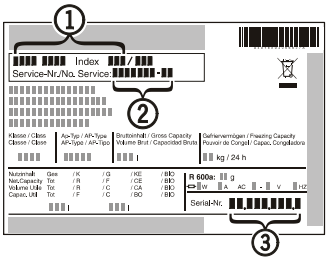

Cleaning

Before cleaning always switch off the appliance.Pull out the mains plug or remove/unscrew the fuse.

- Clean the inside, equipment parts and outer walls with lukewarm water and a little detergent. Do not use abrasive or acid cleaners or chemical solvents.
- Ensure that no cleaning water penetrates into the electrical components or ventilation grille.
- Dry all parts well with a cloth.
- The ventilation grilles should be cleaned regularly. Dust deposits increase energy consumption. Ensure that none of the wires or other components are dislodged, bent or damaged.

Do not use steam cleaners because of the risk of injury and damage.