nati per il freddo

WALL SHOWCASE

STD MUR

E

Maintenance

And Use Manual

CIAM SPA
Viale dei Pini,9
06081 Petrignano d'Assisi
PG – Italy
tel. 075 80161
Fax 075 8016215
http://www.ciamgroup.it
e-mail: info@ciamgroup.it

1. INTRODUCTION

PRESENTATION

Dear Client,

Ciam S.p.A. is pleased to number you among its customers and relies the bought machine will match your expectation. In order to get the best performances of the machine, we recommend you to follow all suggestions and instructions, which are included in this manual.

1.2. HOW TO USE THE MACHINE

- *PERMITTED USES*

This refrigerated display cabinet has been manufactured for **beverage products** presentation and sell.

- *NOT PERMITTED USES*

It is absolutely forbidden the use of the refrigerated display cabinet for **pharmaceutical products**.

1.3. RESPECTED NORMS

The refrigerated display cabinet has been manufactured in respect of the safety issues relevant to the following norm:

- **Directive** N° 2006/95/CE : Low tension
- **Directive** N° 2004/108/CE : Electro-magnetic Compatibility
- **Directive** N° 97/23/EC (P.E.D.) : European Pressure Equipment
- **Norm** CEI 17-13/1 (EN 60439/1) : Realization of Electric Installations
- **Norm** CEI EN 60335-1 (CEI 61-150) : Safety of household and similar electrical appliances
- **Norm** CEI EN 60335-2-24 (CEI 61-56) : Special norms for refrigerators, freezers and ice machines
- **UL471**
- **NSF 7**

1.4. RESPONSIBILITY

Ciam declines any responsibility relevant to damages on persons, animals and/or products in case of:

- No respect of in force norms
- Installation, which is not conform to the instructions manual
- No observance of all maintenance operations, which are suggested in this manual
- No previously agreed change operations with the manufacturer
- No proper use of the refrigerated display cabinet, for which the machine has been produced.

1.5. WARNING

Anytime Ciam reserves the right to up-date the content of this manual and/or to modify the product in order to improve its quality and performance, without any previous notice and/or communication.

2. DISPLAY CASE DATA PLATE

2.1. DATA PLATE CONTENT

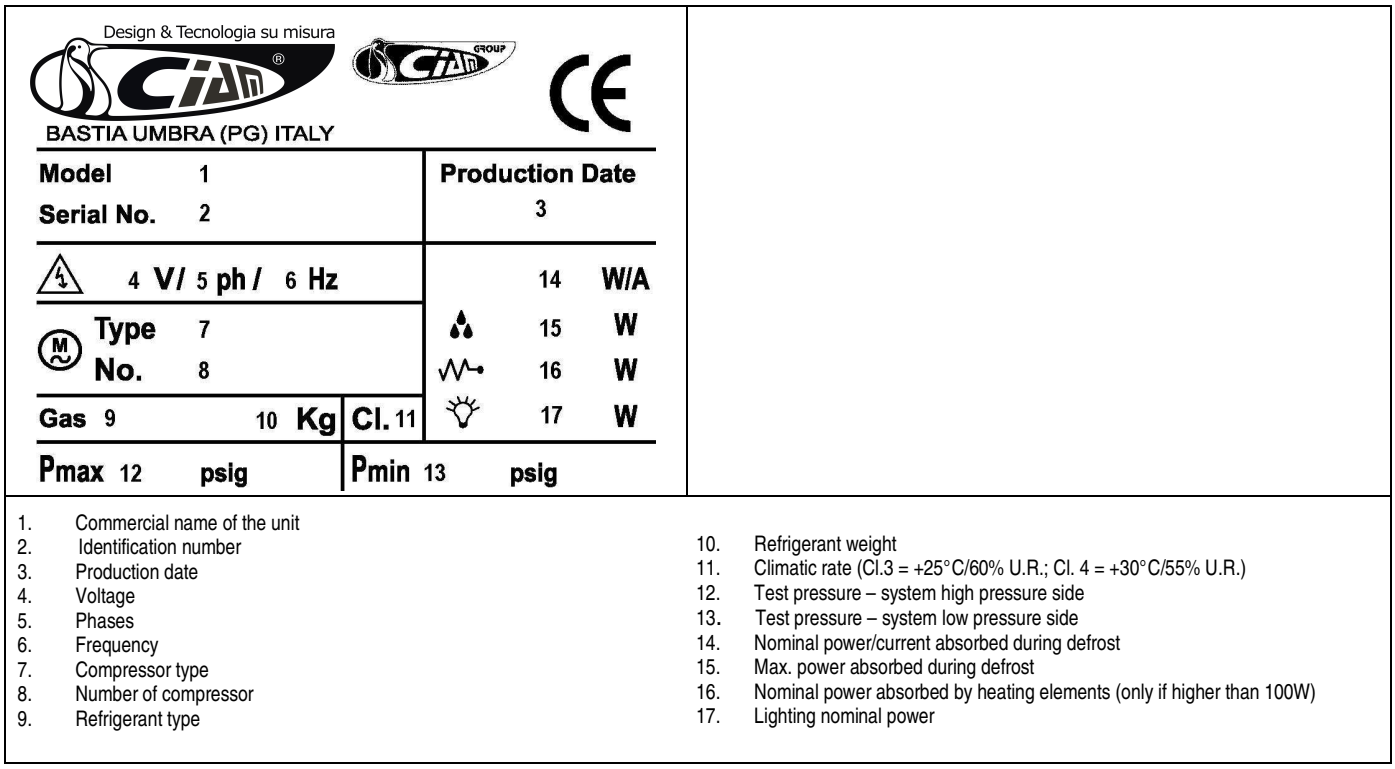

3. INSTALLATION

3.1. MACHINE HANDLING

- The wall showcase handling, from the truck to the final place, has to be made by any truck-lift, which is proper to its weight. The showcase shall be always balanced in order to ensure personnel integrity and machine functionality.
- The showcase can be shipped with or without wood packaging, in case wood crate will be used, will have a pallet base for an easy fork-lift handling. The pallet, however should be handle in the central position**.**
- During the shipment, it is necessary to avoid any crash or/and shake of the wall showcase in order to not damage its frame, especially its glasses
- Do not drag the wall showcase on the floor and do not push it on the upper glasses.
- In case the wall showcase has front or side room-glasses avoids its shipment by air.

3.2 STOCK OF THE SHOWCASE

- Whenever the showcase has to be stoked, follow carefully what suggested before.
- Environmental temperature during the showcase stock can have following range -15°C and + 55°C and humidity between 30% and 90%.
- The wall showcase has always to be protected by sunrays and raining.
- In case the wall showcase has to remain in stock quite long time before its use, keep it with its packaging in order to maintain its protection.

3.3. PACKAGING REMOVE

Before getting the wall showcase from the forwarding agent, check its conditions. In case it will be some damages, inform the driver and sign it on shipping documents. **Eventual damages relevant to the shipment and/or to the wrong stock, have not to be ascribed to the manufacturer.**

3.4. SHOWCASE POSITION

The refrigerated showcase needs particular environmental conditions in order to offer the right performance, so that the area where it will be used has to respect following indications

- Floor has to be levelled perfectly, on the contrary keep the wall showcase on the horizontal position in order to guarantee a perfect defrosting water drain and avoid boring compressor noises.
- The wall showcase has to not be under the sun-rays in order to have its better refrigeration performance, has to remain inside the local or to be sheltered by window curtain. If what described above is not observed, it can determinate an increase of temperature of displayed product and an increasing power consume.
- The wall showcase has not to be under air currents due to open doors or windows, or under roof ventilators or under air condition outlets.
  In case will be not respected the above suggestions it can arise an increasing of temperature of the displayed product and/or an increasing ice phenomena on the evaporator and internal fans, which compromise the correct cold air circulation and product consistence.
- The wall showcase has not to be placed close any heat source as heaters, ovens, etc
- The wall showcase has to have a sufficient place in order to ensure a correct custom service, to make an easy maintenance operation, to guarantee the right air flow necessary to make cold the condenser. Besides the warm air which flows out has to no have any obstacle or to invest other equipments in order to not reduce the correct functions.

3.5. REMOTE CONDENSING UNIT PLACING

- The remote condensing unit has to be checked by specialised technicians and according to the required refrigerating power and their position respect the showcase.
- The condensing unit has to be placed following these points:
  - The condensing unit has to be located at least 250 mm from any eventual wall. **(pic.5.5)**
  - Air flow direction has to be from the eventual wall towards compressor.
  - The local, in case will be closed, has to be with enough air circulation.
  - By the condenser has to be guaranteed in any case as much as possible cold air.
  - In case will be necessary it has to be foreseen a forced air exchange by any fan according to the air flow of condenser.
  - The condensing units of display showcase have to be fixed properly.
  - The generated noise has not exceed the admitted noise levels relevant to the public places, especially in case of domestic buildings.
  - It is always necessary a sufficient place along the four sides of the wall showcase in order to make easy any type of check and maintenance operations.
  - When the condensing units are external will be necessary a frame holder that has to be fixed in a proper way and eventually added with amortising elements. Besides this frame has to be closet with no-water protection grid and sufficient opening holes for ventilation.

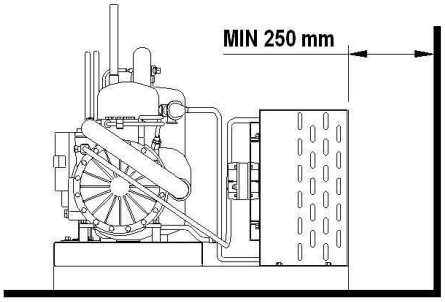

pic.5.5

3.6 ELECTRICAL CONNECTION

- Before proceeding with electrical connection, be sure that the available electric power and tension are what is required on technical label of the wall showcase.
- The electric connection has to be made by qualified personnel and following manufacturer's instructions.
- The wall showcase has already a general switch, however it is necessary an omni polar switch, with a minimum distance among the contacts of 3mm.
- It is obligatory that the wall showcase will be connected properly with an efficient ground socket.

WARNING! A wrong connection may occur always to persons, animals and things, where the manufacturer cannot be considered as responsible.

WARNING!
Althought the wall showcase has main switch breaking both the phases.
Before any maintenance operation disconnect the electrical supply of the wall showcase. (pic.3.6).

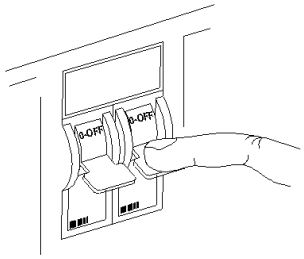

pic.3.6

3.7. IDRAULIC CONNECTION - REMOTE CONDENSING UNIT

- In the case then wall showcaset has a remote condensing unit, it is necessary make the connection of defrosting water outlet with the main water drain outlet.

REFRIGERATION AND ELECTRICAL SYSTEM CABLE CONNECTION GUIDE

AGD	DIGITAL FLAVOURS DISPLAY FEEDER
AEL	ELECTRONIC BALLAST
AP	SERVICE VALVE
CA	SUPPLY CABLE
CAR	AIR CONDENSER
CE	ELECTRONIC CONTROL
CN	MULTIPOLAR CONNECTOR
CO	COMPRESSOR
D	DIOD
DEV	SHUNT
DR	REMOTE DISPLAY
EM	PHOTOCELL EMITTER
EV	EVAPORATOR
F	FUSE
FD	FILTER DRIER
FLU	WATER FLOW SWITCH
FR	COMPRESSOR THERMAL PROTECTION
HL	COMPRESSOR ALARM LIGHT
I	GENERIC SWITCH
IEC	WATER EVAPORATION BIN SWITCH
IGD	DIGITAL FLAVOURS DISPLAY
II	LIGHTING SWITCH
IL	SIGHT GLASS
IMC	WARM SHELF SWITCH
INV	INVERTER
IR	REFRIGERATION SWITCH
IRP	LIGHT REFRIGERATION SWITCH
IV	INTERNAL FAN SWITCH
KM	CONTACTOR
LF	FRONT LIGHTING
LI	INTERNAL UPPER LIGHTING
LIA	FRONT LIGHTING
LIG	FLAVOURS DISPLAY LIGHTING
LIP	REAR LIGHTING
MDIG	DIGITAL MODULE FOR FLAVOURS DISPLAY
MM	SPINNING SHELVES ELECTRIC MOTOR
MUC	CONDENSING UNIT ELECTRIC CONNECTIONS
PA	HIGH PRESSURE CONTROL
PD	HIGH-LOW PRESSURE CONTROL
PO	WATER PUMP
QE	EXTERNAL ELECTRIC PANEL
QF	MAGNETIC-THERMIC SWITCH
R	LIGHTING BALLAST
RADD	RECTIFIER
RE	GENERIC RELAY
REL	ELECTRONIC BALLAST
REP	ELECTRONIC CONTROL TEMPERATURE REPEATER
RES1	COLD AIR DISCHARGE HEATING ELEMENT
RES2	FRONT PROFILE HEATING ELEMENT
RES3	RIGHT/LEFT GLASS HEATING ELEMENT
RES4	FRONT GLASS HEATING ELEMENT
RES5	DEFROST HEATING ELEMENT
RES6	WATER EVAPORATION HATING ELEMENT
RES7	TOP LIGHTING FIXTURE HEATING ELEMENT
RES8	LATERAL GLASS SUPPORT HEATING ELEMENT
RES9	FRONT BAND HEATING ELEMENT
RES10	COUPLING BAND HEATING ELEMENT
RES11	SERVICE TOP HEATING ELEMENT
RES12	UPPER BAND/DOOR FRAME HEATING ELEMENT
RES13	HOT DRY/BAIN MARIE DISPLAY HEATING ELEMENT
RES14	ANTI-FOG SUCTION AIR BAND HEATING ELEMENT
RES15	WARM SHELF HEATING ELEMENT
RES16	SIDE BANDS/ FRONT GLASS HINGE HEATING ELEMENT
RES17	DEHUMIDIFICATION HEATING ELEMENT
RES18	DEFROSTING WATER DRAIN HEATING ELEMENT
RES19	RING FRAME HEATING ELEMENT
RES20	SIDE BAND HEATING ELEMENT
RES21	SUCTION AIR GLASS HEATING ELEMENT
RES22	OUTLET AIR HEATING ELEMENT
RES23	REAR GLASS HEATING ELEMENT
RES24	INTERNAL GLASS HEATING ELEMENT
RES25	FRONT GLASS UPPER FRAME HEATING ELEMENT
RES26	FRONT GLASS LATERAL/LOWER FRAME HEATING ELEMENT
RES27	FRONT GLASS LATERAL FRAME HEATING ELEMENT
RES28	FRONT GLASS LOWER FRAME HEATING ELEMENT
RES29	FRONT GLASSES COUPLING PROFILE HEATING ELEMENT
RES30	DOORS FRAME MIDDLE POST HEATING ELEMENT
RES31	GLASSES PERIMETRAL FRAME HEATING ELEMENT
RES32	HEATED DOORS HEATING ELEMENTS
RES33	WATER DRAIN HEATING ELEMENT
RES34	DOORS FRAME HEATING ELEMENT
RES35	COMPRESSOR CRANKCASE HEATING ELEMENT
RES36	FRONT GLASS FRAME HEATING ELEMENT
RES37	CABINET FRAME HEATING ELEMENT
RES38	HOT COMPARTMENT HEATING ELEMENT
REV	CONDENSER FAN SPEED CONTROL
REVC	CONDENSER FAN RELAY
RI	REFRIGERANT TAP
RIC	COMPRESSOR DELAYER
RICV	PHOTOCELL RECEIVER
RIS	RESERVE , ANTI-FOG HEATER ELEMENT
RL	LIQUID RECEIVER
RLA	WATER LEVEL ELECTRONIC CONTROL
RO	OIL HEATER ELEMENT
SAA	ABSENCE OF WATER LIGHT
SC	CONDENSER PROBE
SD	TERMINAL BOX
SDC	COMPRESSOR TERMINAL BOX
SE	PROXIMITY SENSOR
SEC	MAIN SWITCH
SFV	TANK BOTTOM HEATING COIL
SIDG	FLAVOURS DISPLAY DIGITAL SYSTEM
SL	LIQUID SEPARATOR
SLA	WATER LEVER PROBE
SPC	COMPRESSOR LIGHT
SPMC	WARM SHELF LIGHT
SPR	ELECTRIC SUPPLY LIGHT
SPS	DEFROSTING LIGHT
SS	DEFROSTING PROBE
ST	TEMPERATURE PROBE
STR	LIGHTING STARTER
SU	HUMIDITY PROBE
T	TEMPERATURE CONTROL
TI	WINTER THERMOSTAT
TC	CAPILLARY TUBE
TE	TIMER
TER	THERMOMETER
TF	FUSIBLE PLUG
TMC	WARM SHELF THERMOSTAT
TP	LIGHTING FIXTURES REGRIGERATOR THERMOSTAT
TRA	TRANSFORMER
TRC	ELECTRONIC CONTROL TRANSFORMER
TREV	WATER EVAPORATION HEATER ELEMENT THERMOSTAT
TS	SECURITY THERMOSTAT
TVC	CONDENSER FAN THERMOSTAT
V	COMPRESSOR FAN / GENERAL USE
VC	CONDENSER FAN
VEC	WATER EVAPORATION BIN
VES	EXPANSION VALVE
VI	INTERNAL FAN
VPA	CONDENSING PRESSURE CONTROL WATER VALVE
VR	CHECK VALVE
VRA	SUCTION PRESSURE REGULATION VALVE
VRE	EVAPOTATING PRESSURE REGUTATION VALVE
VS	GENERAL USE SOLENOID VALVE
VSA	SOLENOID WATER VALVE
VSAB	BY-PASS SOLENOID WATER VALVE
VSIC	REVERSING CYCLE SOLENOID VALVE
VSL	LIQUID SOLENOID VALVE
VSS	DEFROSTING SOLENOID VALVE
VT	POWER REGULATOR
VV	GLASS FAN
X1	CABINET CONNECTIONS
X2	EXTERNAL ELECTRIC PANEL CONNECTIONS
X3	CONDENSING UNIT CONNECTIONS

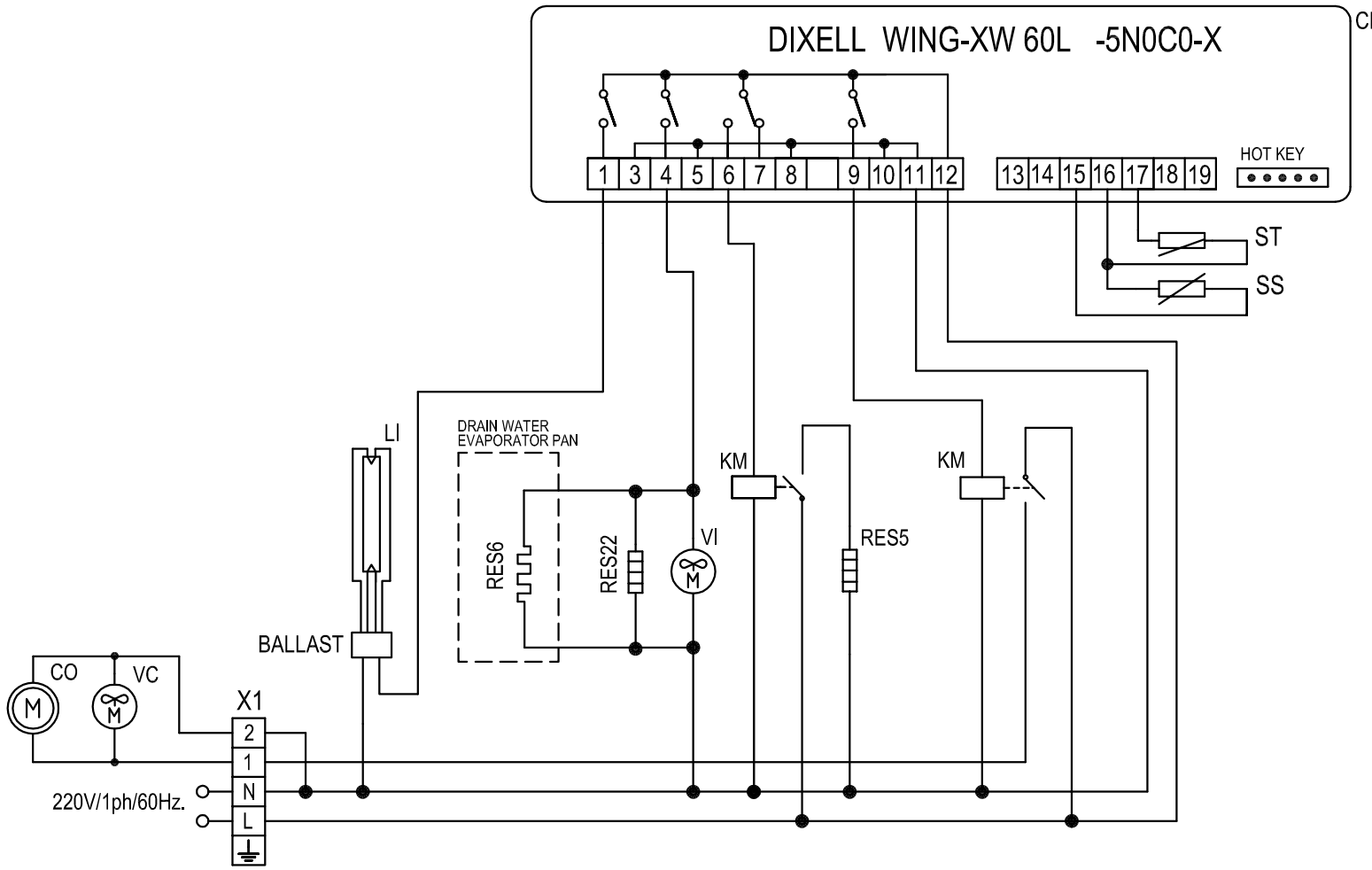

Design & Tecnologia su misura

Viale Europa, 120
06083 Bastia Umbra
Perugia - Italy
Phone:075 80161 Fax 075 8016215
www.ciamgroup.it - mail: tecnico@ciamgroup.it

Rugosità - Ra 3,2

QUOTE SENZA INDICAZIONE DI TOLLERANZA - Grado di precisione medio UNI 5307

0÷6	6÷30	30÷120	120÷315	315÷1000	1000÷2000	3÷6	6÷30	30÷120	oltre 120	Smussi e Raggi
±0,06	±0,1	±0,15	±0,2	±0,3	±0,5	±1°	e 30'	e 20'	e 10'	0,3÷0,8

TRATT. SUPERFICIALE
Togliere Bavature
Toll. generali vedi tabella

REV.	DATA	DESCRIZIONE	VERIFICA	APPROVAZIONE
0	14/05/07	EMISSIONE		
1	23/10/09	Prot.term.evap		

DENOMINAZIONE: Electrical Wiring Diagram
Wall Cabinet MUR series
(internal/external condensing unit)

SCALA

MATERIALE | Q.tà
FINITURA | Peso (Kg)

DESIGNER: Mattiacci Franco
DATA: 14 / 05 / 07

P / N: SEF 269-07_60Hz

FOGLIO

A termini di legge ci riserviamo la proprietà di questo disegno con divieto di riprodurlo o renderlo noto a terzi senza nostra approvazione

Certified Quality System ISO 9001:2000

Digital controller for medium-low temperature refrigeration applications

XW60L

1. GENERAL WARNING

1.1 PLEASE READ BEFORE USING THIS MANUAL

- This manual is part of the product and should be kept near the instrument for easy and quick reference.
- The instrument shall not be used for purposes different from those described hereunder. It cannot be used as a safety device.
- Check the application limits before proceeding.

1.2 ⚠ SAFETY PRECAUTIONS

- Check the supply voltage is correct before connecting the instrument.
- Do not expose to water or moisture: use the controller only within the operating limits avoiding sudden temperature changes with high atmospheric humidity to prevent formation of condensation
- Warning: disconnect all electrical connections before any kind of maintenance.
- Fit the probe where it is not accessible by the End User. The instrument must not be opened.
- In case of failure or faulty operation send the instrument back to the distributor or to "Dixell S.p.A." (see address) with a detailed description of the fault.
- Consider the maximum current which can be applied to each relay (see Technical Data).
- Ensure that the wires for probes, loads and the power supply are separated and far enough from each other, without crossing or intertwining.
- In case of applications in industrial environments, the use of mains filters (our mod. FT1) in parallel with inductive loads could be useful.

2. GENERAL DESCRIPTION

Model **XW60L**, format 38x185mm, is microprocessor based controller, suitable for applications on medium or low temperature ventilated refrigerating units. It has 4 relay outputs to control compressor, fan, defrost, which can be either electrical or reverse cycle (hot gas) and light (configurable). It could be provided with a Real Time Clock which allows programming of up to 6 daily defrost cycles, divided into holidays and workdays. A "Day and Night" function with two different set points is fitted for energy saving. It is also provided with up to four NTC or PTC probe inputs, the first one for temperature control, the second one, to be located onto the evaporator, to control the defrost termination temperature and to managed the fan. One of the 2 digital inputs can operate as third temperature probe. The fourth probe is used to signal the condenser temperature alarm or to display a temperature.
The HOT KEY output allows to connect the unit, by means of the external module XJ485-CX, to a network line **ModBUS-RTU** compatible such as the dixell monitoring units of X-WEB family. It allows to program the controller by means the HOT KEY programming keyboard.
The instrument is fully configurable through special parameters that can be easily programmed through the keyboard.

3. CONTROLLING LOADS

3.1 COMPRESSOR

The regulation is performed according to the temperature measured by the thermostat probe with a positive differential from the set point: if the temperature increases and reaches set point plus differential the compressor is started and then turned off when the temperature reaches the set point value again.

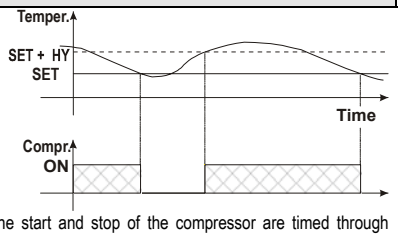

In case of fault in the thermostat probe the start and stop of the compressor are timed through parameters "**COn**" and "**COF**".

3.2 DEFROST

Two defrost modes are available through the "**tdF**" parameter: defrost through electrical heater (**tdF = EL**) and hot gas defrost (**tdF = in**).
The defrost interval depends on the presence of the RTC (optional). If the RTC is present is controlled by means of parameter "**EdF**":
- with EdF=in the defrost is made every "**IdF**" time – standard way for controller without RTC.
- with EdF = "rtc", the defrost is made in real time depending on the hours set in the parameters **Ld1..Ld6** on workdays and in **Sd1…Sd6** in holidays;

Other parameters are used to control defrost cycles: its maximum length (MdF) and two defrost modes: timed or controlled by the evaporator's probe (P2P).
At the end of defrost dripping time is started, its length is set in the Fdt parameter. With Fdt =0 the dripping time is disabled.

3.3 CONTROL OF EVAPORATOR FANS

The fan control mode is selected by means of the "**FnC**" parameter:
FnC = C_n: fans will switch ON and OFF with the compressor and **not run** during defrost;
FnC = o_n fans will run even if the compressor is off, and not run during defrost;
After defrost, there is a timed fan delay allowing for drip time, set by means of the "**Fnd**" parameter.
FnC = C_Y fans will switch ON and OFF with the compressor and **run** during defrost;
FnC = o_Y fans will run continuously also during defrost

An additional parameter "**FSt**" provides the setting of temperature, detected by the evaporator probe, above which the fans are always OFF. This is used to make sure circulation of air only if his temperature is lower than set in "FSt".

3.3.1 Forced activation of fans

This function managed by the **Fct** parameter is designed to avoid short cycles of fans, that could happen when the controller is switched on or after a defrost, when the room air warms the evaporator. **Functioning:** if the difference of temperature between the evaporator and the room probes is more than the value of the Fct parameter, the fans are switched on. With Fct=0 the function is disabled.

3.3.2 Cyclical activation of the fans with compressor off.

When Fnc = c-n or c-Y (fans in parallel to the compressor), by means of the Fon and FoF parameters the fans can carry out on and off cycles even if the compressor is switched off. When the compressor is stopped the fans go on working for the Fon time. With Fon =0 the fans remain always off, when the compressor is off.

3.4 LIGHT RELAY CONFIGURATION

The functioning of the auxiliary relay (terminals. 1-3) can be set by the **oA3** parameter, according to the kind of application. In the following paragraph the possible setting:

3.4.1 Auxiliary thermostat

I.E.. anti condensing heater) with the possibility of switching it on and off also by keyboard

Parameters involved:
- **ACH** Kind of regulation for the auxiliary relay: **Ht:** heating; **cL:** cooling;
- **SAA** Set point for auxiliary relay
- **SHy** Differential for auxiliary relay
- **ArP** Probe for auxiliary relay
- **Sdd** Auxiliary output off during defrost

By means of these 5 parameters the functioning of the auxiliary relay can be set.. The differential is given by the **SHy** parameter.
The auxiliary relay can be switched on also by the AUX button. In this case it remains on till it's manually switched off.

NOTE: Set **oA3 =AUS** and **ArP= nP** (no probe for auxiliary output).
In this case the relay 1-3 can be activated only by digital input with i1F or i2F = AUS.

3.4.2 On/off relay – oA3 = onF

In this case the relay is activated when the controller is turned on and de-activated when the controller is turned off.

3.4.3 Neutral zone regulation

With **oA3 = db** the relay 1-3 can control a heater element to perform a neutral zone action.
oA3 cut in = SET-HY
oA3 cut out = SET

3.4.4 Second compressor

With **oA3 = CP2,** the relay 1-3 operates as second compressor: it is activated in parallel with the relay of the first compressor, with a possible delay set in the **AC1** parameter. Both the compressors are switched off at the same time.

3.4.5 Alarm relay

With **oA3 = ALr** the relay 1-3 operates as alarm relay. It is activated every time an alarm happens. Its status depends on the **tbA** parameter: if "**tbA = y**", the relay is silenced by pressing any key.
If "**tbA = n**", the alarm relay remains on until the alarm condition recovers.

3.4.6 Night blind management during energy saving cycles

With **oA3 = HES,** the relay 1-3 operates to manage the night blind: the relay is energised when the energy saving cycle is activated , by digital input, frontal button or RTC (optional)

4. FRONT PANEL COMMANDS

4.1 STANDARD FRONTAL PANEL

4.2 STEEL FINISHING

SET: To display target set point; in programming mode it selects a parameter or confirm an operation.

(DEF) To start a manual defrost

(UP): To see the max. stored temperature; in programming mode it browses the parameter codes or increases the displayed value.

(DOWN) To see the min stored temperature; in programming mode it browses the parameter codes or decreases the displayed value.

To switch the instrument off, if onF = oFF.

To switch the light, if oA3 = Lig.

KEY COMBINATIONS:

+ To lock & unlock the keyboard.

SET + ▼ To enter in programming mode.
SET + ▲ To return to the room temperature display.

4.3 USE OF LEDS

Each LED function is described in the following table.

LED	MODE	FUNCTION
❄	ON	Compressor enabled
❄	Flashing	Anti-short cycle delay enabled
❄	ON	Defrost enabled
❄	Flashing	Drip time in progress
✣	ON	Fans enabled
✣	Flashing	Fans delay after defrost in progress.
	ON	An alarm is occurring
	ON	Continuous cycle is running
	ON	Energy saving enabled
	ON	Light on
AUX	ON	Auxiliary relay on
°C/°F	ON	Measurement unit
°C/°F	Flashing	Programming phase

5. MAX & MIN TEMPERATURE MEMORIZATION

5.1 HOW TO SEE THE MIN TEMPERATURE

1. Press and release the ▼ key.
2. The "Lo" message will be displayed followed by the minimum temperature recorded.
3. By pressing the ▼ key again or by waiting 5s the normal display will be restored.

5.2 HOW TO SEE THE MAX TEMPERATURE

1. Press and release the ▲ key.
2. The "Hi" message will be displayed followed by the maximum temperature recorded.
3. By pressing the ▲ key again or by waiting 5s the normal display will be restored.

5.3 HOW TO RESET THE MAX AND MIN TEMPERATURE RECORDED

1. Hold press the SET key for more than 3s, while the max. or min temperature is displayed. (rSt message will be displayed)
2. To confirm the operation the "rSt" message starts blinking and the normal temperature will be displayed.

6. MAIN FUNCTIONS

6.1 TO SET THE CURRENT TIME AND DAY (ONLY FOR INSTRUMENTS WITH RTC)

When the instrument is switched on, it's necessary to program the time and day.

1. Enter the Pr1 programming menu, by pushing the SET + ▼ keys for 3s.
2. The rtc parameter is displayed. Push the SET key to enter the real time clock menu.
3. The Hur (hour) parameter is displayed.
4. Push the SET and set current hour by the UP and Down keys, then push SET to confirm the value..
5. Repeat the same operations on the Min (minutes) and dAy (day) parameters.

To exit: Push SET+UP keys or wait for 15 sec without pushing any keys.

6.2 HOW TO SEE THE SET POINT

SET

1. Push and immediately release the **SET** key: the display will show the Set point value;
2. Push and immediately release the **SET** key or wait for 5 seconds to display the probe value again.

6.3 HOW TO CHANGE THE SET POINT

1. Push the **SET** key for more than 2 seconds to change the Set point value;
2. The value of the set point will be displayed and the **"°C" or "°F"** LED starts blinking;
3. To change the Set value push the ▲ or ▼ arrows within 10s.
4. To memorise the new set point value push the **SET** key again or wait 10s.

6.4 HOW TO START A MANUAL DEFROST

Push the **DEF** key for more than 2 seconds and a manual defrost will start.

6.5 HOW TO CHANGE A PARAMETER VALUE

To change the parameter's value operate as follows:

1. Enter the Programming mode by pressing the **Set** + ▼ keys for 3s (the **"°C" or "°F"** LED starts blinking).
2. Select the required parameter. Press the "**SET**" key to display its value
3. Use "**UP**" or "**DOWN**" to change its value.
4. Press "**SET**" to store the new value and move to the following parameter.

To exit: Press **SET + UP** or wait 15s without pressing a key.
NOTE: the set value is stored even when the procedure is exited by waiting the time-out to expire.

6.6 THE HIDDEN MENU

The hidden menu Includes all the parameters of the instrument.

6.6.1 HOW TO ENTER THE HIDDEN MENU

1. Enter the Programming mode by pressing the **Set** + ▼ keys for 3s (the **"°C" or "°F"** LED starts blinking).
2. Released the keys, then push again the Set+ ▼ keys for more than 7s. The Pr2 label will be displayed immediately followed from the HY parameter.
   NOW YOU ARE IN THE HIDDEN MENU.
3. Select the required parameter.
4. Press the "**SET**" key to display its value
5. Use ▲ or ▼ to change its value.
6. Press "**SET**" to store the new value and move to the following parameter.

To exit: Press **SET +** ▲ or wait 15s without pressing a key.
NOTE1: if none parameter is present in Pr1, after 3s the "noP" message is displayed. Keep the keys pushed till the Pr2 message is displayed.
NOTE2: the set value is stored even when the procedure is exited by waiting the time-out to expire.

6.6.2 HOW TO MOVE A PARAMETER FROM THE HIDDEN MENU TO THE FIRST LEVEL AND VICEVERSA.

Each parameter present in the HIDDEN MENU can be removed or put into "THE FIRST LEVEL" (user level) by pressing **"SET +** ▼**"**.
In HIDDEN MENU when a parameter is present in First Level the decimal point is on.

6.7 HOW TO LOCK THE KEYBOARD

1. Keep pressed for more than 3 s the **UP** + **DOWN** keys.
2. The "POF" message will be displayed and the keyboard will be locked. At this point it will be possible only to see the set point or the MAX o Min temperature stored
3. If a key is pressed more than 3s the "POF" message will be displayed.

6.8 TO UNLOCK THE KEYBOARD

Keep pressed together for more than 3s the ▲ and ▼ keys, till the **"Pon"** message will be displayed.

6.9 THE CONTINUOUS CYCLE

When defrost is not in progress, it can be activated by holding the "▲" key pressed for about 3 seconds. The compressor operates to maintain the "**ccS**" set point for the time set through the "**CCt**" parameter. The cycle can be terminated before the end of the set time using the same activation key "▲" for 3 seconds.

6.10 THE ON/OFF FUNCTION

With "**onF = oFF**", pushing the **ON/OFF** key, the instrument is switched off. The **"OFF"** message is displayed. In this configuration, the regulation is disabled.
To switch the instrument on, push again the ON/OFF key.

WARNING: Loads connected to the normally closed contacts of the relays are always supplied and under voltage, even if the instrument is in stand by mode.

7. PARAMETERS

rtc Real time clock menu (only for controller with RTC): to set the time and date and defrost start time.

REGULATION

Hy Differential: (0,1 ÷ 25,5°C / 1÷255 °F) Intervention differential for set point. Compressor Cut IN is Set Point + differential (Hy). Compressor Cut OUT is when the temperature reaches the set point.
LS Minimum set point: (- 50°C÷SET/-58°F÷SET): Sets the minimum value for the set point.
US Maximum set point: (SET÷110°C/ SET÷230°F). Set the maximum value for set point.
Ot Thermostat probe calibration: (-12.0÷12.0°C; -120÷120°F) allows to adjust possible offset of the thermostat probe.
P2P Evaporator probe presence: n= not present: the defrost stops by time; **y=** present: the defrost stops by temperature.
OE Evaporator probe calibration: (-12.0÷12.0°C; -120÷120°F). allows to adjust possible offset of the evaporator probe.
P3P Third probe presence (P3): n= not present:, the terminals 13-14 operate as digital input.; **y=** present:, the terminals 13-14 operate as third probe.
O3 Third probe calibration (P3): (-12.0÷12.0°C; -120÷120°F). allows to adjust possible offset of the third probe.
P4P Fourth probe presence: (n = Not present; y = present).
o4 Fourth probe calibration: (-12.0÷12.0°C) allows to adjust possible offset of the fourth probe.
OdS Outputs activation delay at start up: (0÷255min) This function is enabled at the initial start up of the instrument and inhibits any output activation for the period of time set in the parameter.
AC Anti-short cycle delay: (0÷50 min) minimum interval between the compressor stop and the following restart.
AC1 2nd compressor delay at start up (0÷255s) Used only if oA3 = cP2 Time interval between the switching on of the first compressor and the second one.
rtr Percentage of the second and first probe for regulation (0÷100; 100 = P1, 0 = P2): it allows to set the regulation according to the percentage of the first and second probe, as for the following formula (rtr(P1-P2)/100 + P2).
CCt Compressor ON time during continuous cycle: (0.0÷24.0h; res. 10min) Allows to set the length of the continuous cycle: compressor stays on without interruption for the CCt time. Can be used, for instance, when the room is filled with new products.
CCS Set point for continuous cycle: (-50÷150°C) it sets the set point used during the continuous cycle.
COn Compressor ON time with faulty probe: (0÷255 min) time during which the compressor is active in case of faulty thermostat probe. With COn=0 compressor is always OFF.
COF Compressor OFF time with faulty probe: (0÷255 min) time during which the compressor is OFF in case of faulty thermostat probe. With COF=0 compressor is always active.

DISPLAY

CF Temperature measurement unit: °C=Celsius; **°F**=Fahrenheit. WARNING: When the measurement unit is changed the SET point and the values of the parameters Hy, LS, US, Ot, ALU and ALL have to be checked and modified if necessary).
rES Resolution (for °C): (in = 1°C; dE = 0.1 °C) allows decimal point display.

Lod Instrument display: (P1; P2, P3, P4, SET, dtr): it selects which probe is displayed by the instrument: **P1** = Thermostat probe; **P2** = Evaporator probe; **P3** = Third probe(only for model with this option enabled); **P4** = Fourth probe, **SET** = set point; **dtr** = percentage of visualization.

rEd X- REP display (*optional*): (P1; P2, P3, P4, SET, dtr): it selects which probe is displayed by X- REP: **P1** = Thermostat probe; **P2** = Evaporator probe; **P3** = Third probe(only for model with this option enabled); **P4** = Fourth probe, **SET** = set point; **dtr** = percentage of visualization.

dLy Display delay: (0 ÷20.0m; resul. 10s) when the temperature increases, the display is updated of 1 °C/1°F after this time.

dtr Percentage of the second and first probe for visualization when Lod = dtr (0÷100; 100 = P1, 0 = P2): if Lod = dtr it allows to set the visualization according to the percentage of the first and second probe, as for the following formula (dtr(P1-P2)/100 + P2).

DEFROST

EdF Defrost mode (only for controller with RTC):
rtc = **Real Time Clock mode**. Defrost time follows **Ld1÷Ld6** parameters on workdays and **Sd1÷Sd6** on holidays.
in = **interval mode**. The defrost starts when the time "**Idf**" is expired.

tdF Defrost type: EL = electrical heater; in = hot gas

dFP Probe selection for defrost termination: nP = no probe; **P1** =thermostat probe; **P2 =** evaporator probe; **P3** =configurable probe; **P4** = Probe on Hot Key plug.

dtE Defrost termination temperature: (-50÷50 °C/ -58÷122°F) (Enabled only when EdF=Pb) sets the temperature measured by the evaporator probe, which causes the end of defrost.

IdF Interval between defrost cycles: (0÷120h) Determines the time interval between the beginning of two defrost cycles.

MdF (Maximum) length for defrost: (0÷255min) When **P2P = n**, (not evaporator probe: timed defrost) it sets the defrost duration, when **P2P = y** (defrost end based on temperature) it sets the maximum length for defrost.

dSd Start defrost delay: (0÷99min) This is useful when different defrost start times are necessary to avoid overloading the plant.

dFd Temperature displayed during defrost: (**rt** = real temperature; **it** = temperature at defrost start; **SEt** = set point; **dEF** = "dEF" label)

dAd MAX display delay after defrost: (0÷255min). Sets the maximum time between the end of defrost and the restarting of the real room temperature display.

Fdt Drip time: (0÷120 min) time interval between reaching defrost termination temperature and the restoring of the control's normal operation. This time allows the evaporator to eliminate water drops that might have formed due to defrost.

dPo First defrost after start-up: (y = immediately; n = after the IdF time)

dAF Defrost delay after continuous cycle: (0÷23.5h) time interval between the end of the fast freezing cycle and the following defrost related to it.

FANS

FnC Fans operating mode: **C-n**= runs with the compressor, OFF during defrost;
o-n = continuous mode, OFF during defrost;
C-Y = runs with the compressor, ON during defrost;
o-Y = continuous mode, ON during defrost;

Fnd Fans delay after defrost: (0÷255min) Interval between end of defrost and evaporator fans start.

Fct Temperature differential avoiding short cycles of fans (0÷59°C; Fct=0 function disabled). If the difference of temperature between the evaporator and the room probes is more than the value of the Fct parameter, the fans are switched on.

FSt Fans stop temperature: (-50÷50°C/122°F) setting of temperature, detected by evaporator probe, above which fans are always OFF.

Fon Fan ON time: (0÷15 min) **with** Fnc = C_n or C_y, (fan activated in parallel with compressor). it sets the evaporator fan ON cycling time when the compressor is off. With Fon =0 and FoF ≠ 0 the fan are always off, with Fon=0 and FoF =0 the fan are always off.

FoF Fan OFF time: (0÷15 min) **with** Fnc = C_n or C_y, (fan activated in parallel with compressor). it sets the evaporator fan off cycling time when the compressor is off. With Fon =0 and FoF ≠ 0 the fan are always off, with Fon=0 and FoF =0 the fan are always off.

FAP Probe selection for fan management: nP = no probe; **P1** =thermostat probe; **P2 =** evaporator probe; **P3** =configurable probe; **P4** = Probe on Hot Key plug.

AUXILIARY THERMOSTAT CONFIGURATION (terms. 1-3) – OA3 = AUS

ACH Kind of regulation for auxiliary relay: **Ht** = heating; **CL** = cooling

SAA Set Point for auxiliary relay: (-50,0÷110,0°C; -58÷230°F) it defines the room temperature set point to switch auxiliary relay.

SHy Differential for auxiliary output: (0,1 ÷ 25,5°C / 1÷255 °F) Intervention differential for auxiliary output set point.
With ACH = cL AUX Cut in is SAA + SHy; . AUX Cut out is SAA
With ACH = Ht AUX Cut in is SAA - SHy; . AUX Cut out is SAA

ArP Probe selection for auxiliary: nP = no probe, the auxiliary relay is switched only by button; **P1 =** Probe 1 (Thermostat probe); **P2 =** Probe 2 (evaporator probe); **P3 =** Probe 3 (display probe); **P4 =** Probe 4 fourth probe.

Sdd Auxiliary relay off during defrost: n = the auxiliary relay operates during defrost.
y = the auxiliary relay is switched off during defrost.

ALARMS

ALP Probe selection for alarm: nP = no probe, the temperature alarms are disabled; **P1 =** Probe 1 (Thermostat probe); **P2 =** Probe 2 (evaporator probe); **P3 =** Probe 3 (display probe); **P4 =** Fourth probe.

ALC Temperature alarms configuration: (Ab; rE)
Ab= absolute temperature: alarm temperature is given by the ALL or ALU values. **rE** = temperature alarms are referred to the set point. Temperature alarm is enabled when the temperature exceeds the "SET+ALU" or "SET-ALL" values.

ALU MAXIMUM temperature alarm: (SET÷110°C; SET÷230°F) when this temperature is reached the alarm is enabled, after the "ALd" delay time.

ALL Minimum temperature alarm: (-50.0 ÷ SET °C; -58÷230°F when this temperature is reached the alarm is enabled, after the "ALd" delay time.

AFH Differential for temperature alarm/ fan recovery: (0,1÷25,5°C; 1÷45°F) Intervention differential for recovery of temperature alarm. It's also used for the restart of the fan when the FSt temperature is reached

ALd Temperature alarm delay: (0÷255 min) time interval between the detection of an alarm condition and alarm signalling.

dAO Exclusion of temperature alarm at start-up: (from 0.0 min to 23.5h) time interval between the detection of the temperature alarm condition after instrument power on and alarm signalling.

CONDENSER TEMPERATURE ALARM

AP2 Probe selection for temperature alarm of condenser: nP = no probe; **P1** =thermostat probe; **P2 =** evaporator probe; **P3** =configurable probe; **P4** = Probe on Hot Key plug.

AL2 Low temperature alarm of condenser: (-55÷150°C) when this temperature is reached the LA2 alarm is signalled, possibly after the Ad2 delay.

Au2 High temperature alarm of condenser: (-55÷150°C) when this temperature is reached the HA2 alarm is signalled, possibly after the Ad2 delay.

AH2 Differential for temperature condenser alarm recovery: (0,1÷25,5°C; 1÷45°F)

Ad2 Condenser temperature alarm delay: (0÷255 min) time interval between the detection of the condenser alarm condition and alarm signalling.

dA2 Condenser temperature alarm exclusion at start up: (from 0.0 min to 23.5h, res. 10min)

bLL Compressor off with low temperature alarm of condenser: **n = no:** compressor keeps on working**; Y = yes,** compressor is switched off till the alarm is present, in any case regulation restarts after AC time at minimum.

AC2 Compressor off with high temperature alarm of condenser: **n = no:** compressor keeps on working**; Y = yes,** compressor is switched off till the alarm is present, in any case regulation restarts after AC time at minimum.

AUXILIARY RELAY

tbA Alarm relay silencing (with oA3 =ALr):
n= silencing disabled: alarm relay stays on till alarm condition lasts,
y =silencing enabled: alarm relay is switched OFF by pressing a key during an alarm

oA3 Fourth relay configuration (1-3): dEF, FAn: do not select it!. **ALr**: alarm; **Lig**: light; **AuS**: Auxiliary relay; **onF**: always on with instrument on; **db=** neutral zone; **cP2 =** second compressor; **dEF2:** do not select it!;. **HES:**. night blind

AoP Alarm relay polarity: it set if the alarm relay is open or closed when an alarm happens. **CL**= terminals 1-3 closed during an alarm; **oP** = terminals 1-3 open during an alarm

DIGITAL INPUTS

i1P Digital input polarity (13-14): oP: the digital input is activated by opening the contact; **CL:** the digital input is activated by closing the contact.

i1F Digital input configuration (13-14): EAL= external alarm: "EA" message is displayed; **bAL**= serious alarm "CA" message is displayed. **PAL**= pressure switch alarm, "CA" message is displayed; **dor**= door switch function; **dEF**= activation of a defrost cycle; **AUS**=not enabled; **Htr**= kind of action inversion (cooling – heating); **FAn**= **not set it; ES**= Energy saving; **HdF** = Holiday defrost (enable only with RTC); **onF =** to switch the controller off.

did (0÷255 min) **with i1F= EAL or i1F = bAL digital input alarm delay (13-14):** delay between the detection of the external alarm condition and its signalling.
with i1F= dor: door open signalling delay
with i1F= PAL: time for pressure switch function: time interval to calculate the number of the pressure switch activation.

i2P 2nd digital input polarity (13-19): oP: the digital input is activated by opening the contact; **CL:** the digital input is activated by closing the contact.

i2F 2nd digital input configuration (13-19): EAL= external alarm: "EA" message is displayed; **bAL**= serious alarm "CA" message is displayed. **PAL**= pressure switch alarm, "CA" message is displayed; **dor**= door switch function; **dEF**= activation of a defrost cycle; **AUS**=not enabled; **Htr**= kind of action inversion (cooling – heating); **FAn**= **not set it; ES**= Energy saving; **HdF** = Holiday defrost (enable only with RTC); **onF =** to switch the controller off.

d2d (0÷255 min) **with i2F= EAL or i2F= bAL 2nd digital input alarm delay (13-19):** delay between the detection of the external alarm condition and its signalling.
with i2F= dor: door open signalling delay
with i2F= PAL: time for pressure switch function: time interval to calculate the number of the pressure switch activation.

nPS Pressure switch number: (0 ÷15) Number of activation of the pressure switch, during the "**did**" interval, before signalling the alarm event (I2F= PAL).
If the nPS activation in the did time is reached, switch off and on the instrument to restart normal regulation.

odc Compressor and fan status when open door: no = normal; **Fan** = Fan OFF; **CPr** = Compressor OFF; **F_C** = Compressor and fan OFF.

rrd Outputs restart after doA alarm: no= outputs not affected by the doA alarm; **yES =** outputs restart with the doA alarm.

HES Temperature increase during the Energy Saving cycle:
(-30,0°C÷30,0°C) it sets the increasing value of the set point during the Energy Saving cycle.

TO SET CURRENT TIME AND WEEKLY HOLIDAYS (ONLY FOR MODELS WITH RTC)

Hur Current hour (0 ÷ 23 h)

Min Current minute (0 ÷ 59min)

dAY Current day (Sun ÷ SAt)

Hd1 First weekly holiday (Sun ÷ nu) Set the first day of the week which follows the holiday times.

Hd2 Second weekly holiday (Sun ÷ nu) Set the second day of the week which follows the holiday times.

N.B. Hd1,Hd2 can be set also as **"nu"** value (Not Used).

TO SET ENERGY SAVING TIMES (ONLY FOR MODELS WITH RTC)

ILE Energy Saving cycle start during workdays: (0 ÷ 23h 50 min.) During the Energy Saving cycle the set point is increased by the value in HES so that the operation set point is SET + HES.

dLE Energy Saving cycle length during workdays: (0 ÷ 24h 00 min.) Sets the duration of the Energy Saving cycle on workdays.

ISE Energy Saving cycle start on holidays. (0 ÷ 23h 50 min.)

dSE Energy Saving cycle length on holidays (0 ÷ 24h 00 min.)

TO SET DEFROST TIMES (ONLY FOR MODELS WITH RTC)

Ld1÷Ld6 Workday defrost start (0 ÷ 23h 50 min.) These parameters set the beginning of the 6 programmable defrost cycles during workdays. Ex. When **Ld2** = 12.4 the second defrost starts at 12.40 during workdays.

Sd1÷Sd6 Holiday defrost start (0 ÷ 23h 50 min.) These parameters set the beginning of the 6 programmable defrost cycles on holidays. Ex. When **Sd2** = 3.4 the second defrost starts at 3.40 on holidays.
N.B. :<u>To disable a defrost cycle set it to "nu"(not used).</u> ***Ex.*** *If **Ld6**=nu **;** the sixth defrost cycle is disabled*

OTHER

Adr Serial address (1÷244): Identifies the instrument address when connected to a ModBUS compatible monitoring system.

PbC Type of probe: it allows to set the kind of probe used by the instrument: **PbC** = PBC probe, **ntc =** NTC probe.
onF on/off key enabling: nu = disabled; **oFF =** enabled; **ES = not set it**.
dP1 Thermostat probe display
dP2 Evaporator probe display
dP3 Third probe display- ***optional***.
dP4 Fourth probe display.
rSE Real set point: it shows the set point used during the energy saving cycle or during the continuous cycle.
rEL Software release for internal use**.**
Ptb Parameter table code: readable only**.**

8. DIGITAL INPUTS

The first digital input 13-14 is enabled with P3P = n.
With P3P = n and i1F = i2F the second digital input is disabled
The free voltage digital inputs are programmable by the "**i1F**" and i2F parameters.

8.1 GENERIC ALARM (i1F or i2F = EAL)

As soon as the digital input is activated the unit will wait for "**did**" time delay before signalling the "**EAL**" alarm message. The outputs status don't change. The alarm stops just after the digital input is de-activated.

8.2 SERIOUS ALARM MODE (i1F or i2F = bAL)

When the digital input is activated, the unit will wait for "**did**" delay before signalling the "**CA**" alarm message. The relay outputs are switched OFF. The alarm will stop as soon as the digital input is de-activated.

8.3 PRESSURE SWITCH (i1F or i2F = PAL)

If during the interval time set by "**did**" parameter, the pressure switch has reached the number of activation of the "**nPS**" parameter, the "**CA**" pressure alarm message will be displayed. The compressor and the regulation are stopped. When the digital input is ON the compressor is always OFF. **If the nPS activation in the did time is reached, switch off and on the instrument to restart normal regulation.**

8.4 DOOR SWITCH INPUT (i1F or i2F = dor)

It signals the door status and the corresponding relay output status through the "**odc**" parameter: **no** = normal (any change); **Fan** = Fan OFF; **CPr** = Compressor OFF; **F_C** = Compressor and fan OFF. Since the door is opened, after the delay time set through parameter "**did**", the door alarm is enabled, the display shows the message "**dA**" and **the regulation restarts is rtr = yES.** The alarm stops as soon as the external digital input is disabled again. With the door open, the high and low temperature alarms are disabled.

8.5 START DEFROST (i1F or i2F = dEF)

It starts a defrost if there are the right conditions. After the defrost is finished, the normal regulation will restart only if the digital input is disabled otherwise the instrument will wait until the "MdF" safety time is expired.

8.6 SWITCH THE AUXILIARY RELAY (i1F or i2F = AUS)

With oA3 = AUS the digital input switched the status of the auxiliary relay

8.7 INVERSION OF THE KIND OF ACTION: HEATING-COOLING (i1F or i2F=Htr)

This function allows to invert the regulation of the controller: from cooling to heating and viceversa.

8.8 ENERGY SAVING (i1F = ES)

The Energy Saving function allows to change the set point value as the result of the SET+ HES (parameter) sum. This function is enabled until the digital input is activated.

8.9 HOLIDAY DEFROST (i1F or i2F = HDF) –ONLY FOR MODELS WITH RTC

This function enabled the holiday defrost setting.

8.10 ON OFF FUNCTION (i1F or i2F = onF)

To switch the controller on and off.

8.11 DIGITAL INPUTS POLARITY

The digital input polarity depends on the "**i1P**" and **"i2P"** parameters.
i1P or i2P =CL: the input is activated by closing the contact.
i1P or i2P=OP: the input is activated by opening the contact

9. TTL SERIAL LINE – FOR MONITORING SYSTEMS

The TTL serial line, available through the HOT KEY connector, allows by means of the external TTL/RS485 converter, **XJ485-CX**, to connect the instrument to a monitoring system **ModBUS-RTU** compatible such as the X-WEB500/3000/300.

10. X-REP OUTPUT – OPTIONAL

As optional, an X-REP can be connected to the instrument, trough the dedicated connector.

To connect the X-REP to the instrument the following connectors must be used CAB/REP1(1m), CAB/REP2 (2m), CAB/REP5 (5m),

11. INSTALLATION AND MOUNTING

The controller **XW60L**, shall be mounted on vertical panel, in a 150x31 mm hole, and fixed using two screws ∅ 3 x 2mm. To obtain an IP65 protection grade use the front panel rubber gasket (mod. RG-L). The temperature range allowed for correct operation is 0 - 60 °C. Avoid places subject to strong vibrations, corrosive gases, excessive dirt or humidity. The same recommendations apply to probes. Let the air circulate by the cooling holes.

11.1 CUT OUT

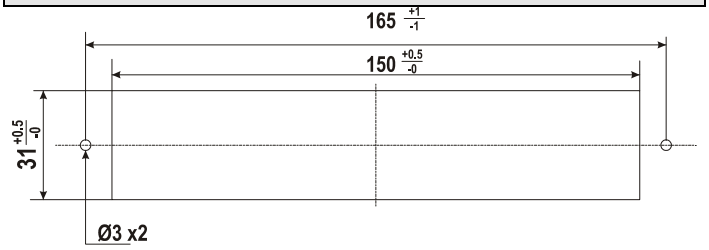

11.2 STEEL FINISHING MOUNTING

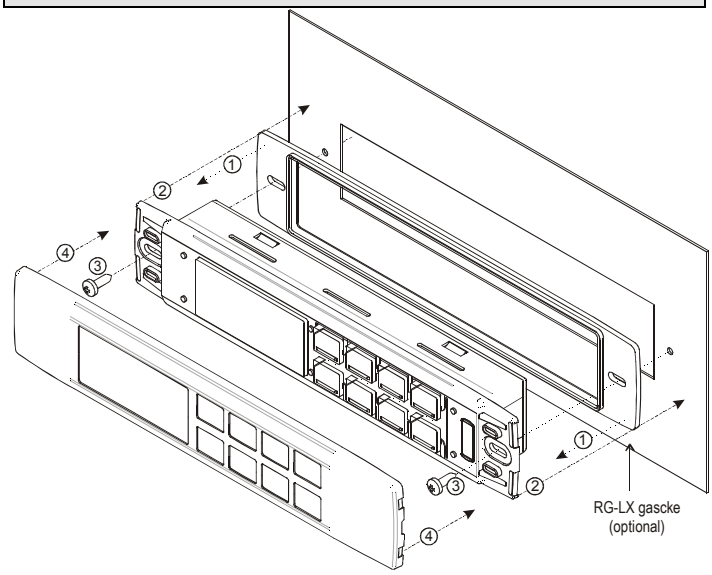

12. ELECTRICAL CONNECTIONS

The instruments are provided with screw terminal block to connect cables with a cross section up to 2,5 mm² for the digital and analogue inputs. Relays and power supply have a Faston connection (6,3mm). Heat-resistant cables have to be used. Before connecting cables make sure the power supply complies with the instrument's requirements. Separate the probe cables from the power supply cables, from the outputs and the power connections. Do not exceed the maximum current allowed on each relay, in case of heavier loads use a suitable external relay.
N.B. Maximum current allowed for all the loads is 20A.

12.1 PROBE CONNECTION

The probes shall be mounted with the bulb upwards to prevent damages due to casual liquid infiltration. It is recommended to place the thermostat probe away from air streams to correctly measure the average room temperature. Place the defrost termination probe among the evaporator fins in the coldest place, where most ice is formed, far from heaters or from the warmest place during defrost, to prevent premature defrost termination.

13. HOW TO USE THE HOT KEY

13.1 HOW TO PROGRAM A HOT KEY FROM THE INSTRUMENT (UPLOAD)

1. Program one controller with the front keypad.
2. When the controller is ON, insert the "**Hot key**" and push ▲ key; the **"uPL"** message appears followed a by flashing **"End"**
3. Push "**SET"** key and the **End** will stop flashing.
4. Turn OFF the instrument remove the **"Hot Key",** then turn it ON again.

NOTE: the "**Err**" message is displayed for failed programming. In this case push again ▲ key if you want to restart the upload again or remove the "**Hot key**" to abort the operation.

13.2 HOW TO PROGRAM AN INSTRUMENT USING A HOT KEY (DOWNLOAD)

1. Turn OFF the instrument.
2. Insert a **programmed "Hot Key" into the 5 PIN receptacle** and then turn the Controller ON.
3. Automatically the parameter list of the **"Hot Key"** is downloaded into the Controller memory, the "**doL**" message is blinking followed a by flashing **"End".**
4. After 10 seconds the instrument will restart working with the new parameters.
5. Remove the **"Hot Key"**..

NOTE the message "**Err**" is displayed for failed programming. In this case turn the unit off and then on if you want to restart the download again or remove the "**Hot key**" to abort the operation.

14. ALARM SIGNALS

Message	Cause	Outputs
"P1"	Room probe failure	Compressor output acc. to par. "Con" and "COF"
"P2"	Evaporator probe failure	Defrost end is timed
"P3"	Third probe failure	Outputs unchanged
"P4"	Fourth probe failure	Outputs unchanged
"HA"	Maximum temperature alarm	Outputs unchanged.
"LA"	Minimum temperature alarm	Outputs unchanged.
"HA2"	Condenser high temperature	It depends on the "Ac2" parameter

Message	Cause	Outputs
"LA2"	Condenser low temperature	It depends on the "bLL" parameter
"dA"	Door open	Compressor and fans restarts
"EA"	External alarm	Output unchanged.
"CA"	Serious external alarm (i1F=bAL)	All outputs OFF.
"CA"	Pressure switch alarm (i1F=PAL)	All outputs OFF
"rtc"	Real time clock alarm	Alarm output ON; Other outputs unchanged; Defrosts according to par. "IdF" Set real time clock has to be set
rtF	Real time clock board failure	Alarm output ON; Other outputs unchanged; Defrosts according to par. "IdF" Contact the service

14.1 SILENCING BUZZER / ALARM RELAY OUTPUT

If "**tbA = y**", the buzzer and the relay are is silenced by pressing any key.
If "**tbA = n**", only the buzzer is silenced while the alarm relay is on until the alarm condition recovers.

14.2 ALARM RECOVERY

Probe alarms **P1**", "**P2**", "**P3**" and "**P4**" start some seconds after the fault in the related probe; they automatically stop some seconds after the probe restarts normal operation. Check connections before replacing the probe.
Temperature alarms "**HA**", "**LA**" "**HA2**" and "**LA2**" automatically stop as soon as the temperature returns to normal values.
Alarms **"EA"** and **"CA"** (with i1F=bAL) recover as soon as the digital input is disabled.
Alarm "**CA"** (with i1F=PAL) recovers only by **switching off and on** the instrument.

14.3 OTHER MESSAGES

Pon	Keyboard unlocked.
PoF	Keyboard locked
noP	**In programming mode**: none parameter is present in Pr1 **On the display** or in dP2, dP3, dP4: the selected probe is nor enabled

15. TECHNICAL DATA

Housing: self extinguishing ABS.
Case: facia 38x185 mm; depth 76mm
Mounting : panel mounting in a 150x31 mm panel cut-out with two screws. ∅ 3 x 2mm.
Distance between the holes 165mm
Protection: IP20; **Frontal protection:** IP65 with frontal gasket mod RG-L. (optional)
Connections: Screw terminal block ≤ 2,5 mm² heat-resistant wiring and 6,3mm Faston
Power supply: 230Vac or. 110Vac or 24Vac ± 10%
Power absorption: 5VA max.
Display: 3 digits, red LED, 14,2 mm high.
Display: 3 digits, red LED, 14,2 mm high; **Inputs**: Up to 4 NTC or PTC probes.
Digital inputs: 2 free voltage
Relay outputs: ***Total current on loads MAX. 20A***
compressor: relay SPST 20(8) A, 250Vac
light: relay SPST 8 or 16(3) A, 250Vac
fans: relay SPST 8(3) A, 250Vac
defrost: relay SPST 8(3) A, 250Vac
Other output : buzzer (optional)
Serial output : TTL standard; **Communication protocol:** Modbus - RTU
Data storing: on the non-volatile memory (EEPROM).
Internal clock back-up: 24 hours (only for model with RTC)
Kind of action: 1B; **Pollution grade:** 2;**Software class:** A.;
Rated impulsive voltage: 2500V; **Over voltage Category**: II
Operating temperature: 0÷60 °C; **Storage temperature:** -30÷85 °C.
Relative humidity: 20÷85% (no condensing)
Measuring and regulation range: NTC probe: -40÷110°C (-40÷230°F);
PTC probe: -50÷150°C (-58÷302°F)
Resolution: 0,1 °C or 1°C or 1 °F (selectable); **Accuracy (ambient temp. 25°C)**: ±0,7 °C ±1 digit

16. CONNECTIONS

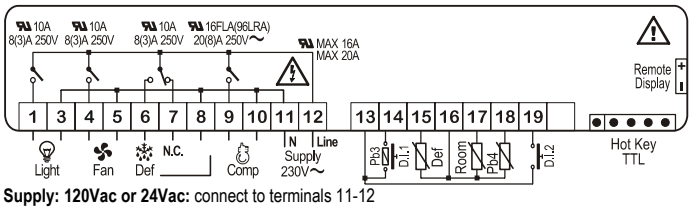

Supply: 120Vac or 24Vac: connect to terminals 11-12
The X-REP output is optional
The light relay can be also 16(5)A according to the model

17. DEFAULT SETTING VALUES

Label	Name	Range	°C/°F	Level
Set	Set point	LS÷US	-5.0	- - -
rtc*	Real time clock menu	-	-	Pr1
Hy	Differential	0,1÷25.5°C/ 1÷ 255°F	2.0	Pr1
LS	Minimum set point	-50°C÷SET/-58°F÷SET	-50.0	Pr2
US	Maximum set point	SET÷110°C/ SET ÷ 230°F	110	Pr2
Ot	Thermostat probe calibration	-12÷12°C /-120÷120°F	0.0	Pr1
P2P	Evaporator probe presence	n=not present; Y=pres.	Y	Pr1
OE	Evaporator probe calibration	-12÷12°C /-120÷120°F	0.0	Pr2
P3P	Third probe presence	n=not present; Y=pres.	n	Pr2
O3	Third probe calibration	-12÷12°C /-120÷120°F	0	Pr2
P4P	Fourth probe presence	n=not present; Y=pres.	n	Pr2
O4	Fourth probe calibration	-12÷12°C /-120÷120°F	0	Pr2
OdS	Outputs delay at start up	0÷255 min	0	Pr2
AC	Anti-short cycle delay	0 ÷ 50 min	1	Pr1
Ac1	Second compressor start delay	0÷255s	5	Pr2
rtr	P1-P2 percentage for regulation	0 ÷ 100 (100=P1 , 0=P2)	100	Pr2
CCt	Continuous cycle duration	0.0÷24.0h	0.0	Pr2
CCS	Set point for continuous cycle	(-55.0÷150,0°C) (-67÷302°F)	-5	Pr2
COn	Compressor ON time with faulty probe	0 ÷ 255 min	15	Pr2
COF	Compressor OFF time with faulty probe	0 ÷ 255 min	30	Pr2
CF	Temperature measurement unit	°C ÷ °F	°C	Pr2
rES	Resolution	in=integer; dE= dec.point	dE	Pr1
Lod	Probe displayed	P1;P2	P1	Pr2
rEd²	X-REP display	P1 – P2 – P3 – P4 – SEt – dtr	P1	Pr2
dLy	Display temperature delay	0 ÷ 20.0 min (10 sec.)	0.0	Pr2
dtr	P1-P2 percentage for display	1 ÷ 99	50	Pr2
EdF*	Kind of interval for defrost	rtc ÷in	in	Pr2
tdF	Defrost type	EL=el. heater; in= hot gas	EL	Pr1
dFP	Probe selection for defrost termination	nP; P1; P2; P3; P4	P2	Pr2
dtE	Defrost termination temperature	-50 ÷ 50 °C	8	Pr1
IdF	Interval between defrost cycles	1 ÷ 120 ore	6	Pr1
MdF	(Maximum) length for defrost	0 ÷ 255 min	30	Pr1
dSd	Start defrost delay	0÷99min	0	Pr2
dFd	Displaying during defrost	rt, it, SEt, DEF	it	Pr2
dAd	MAX display delay after defrost	0 ÷ 255 min	30	Pr2
Fdt	Draining time	0÷120 min	0	Pr2
dPo	First defrost after start-up	n=after IdF; y=immed.	n	Pr2
dAF	Defrost delay after fast freezing	0 ÷ 23h e 50'	0.0	Pr2
Fnc	Fan operating mode	C-n, o-n, C-y, o-Y	o-n	Pr1
Fnd	Fan delay after defrost	0÷255min	10	Pr1
Fct	Differential of temperature for forced activation of fans	0÷50°C	10	Pr2
FSt	Fan stop temperature	-50÷50°C/-58÷122°F	2	Pr1
Fon	Fan on time with compressor off	0÷15 (min.)	0	Pr2
FoF	Fan off time with compressor off	0÷15 (min.)	0	Pr2
FAP	Probe selection for fan management	nP; P1; P2; P3; P4	P2	Pr2
ACH	Kind of action for auxiliary relay	CL; Ht	cL	Pr2
SAA	Set Point for auxiliary relay	-50,0÷110°C / -58÷230°F	0,0	Pr2
SHy	Differential for auxiliary relay	0,1÷25.5°C/ 1÷ 255°F	2,0	Pr2
ArP	Probe selection for auxiliary relay	nP / P1 / P2 / P3/P4	nP	Pr2
Sdd	Auxiliary relay operating during defrost	n÷y	n	Pr2
ALP	Alarm probe selection	nP; P1; P2; P3; P4	P1	Pr2
ALc	Temperat. alarms configuration	rE= related to set; Ab = absolute	Ab	Pr2
ALU	MAXIMUM temperature alarm	Set÷110.0°C; Set÷230°F	110,0	Pr1
ALL	Minimum temperature alarm	-50.0°C÷Set/ -58°F÷Set	-50,0	Pr1
AFH	Differential for temperat. alarm recovery	(0,1°C÷25,5°C) (1°F÷45°F)	2,0	Pr2
ALd	Temperature alarm delay	0 ÷ 255 min	15	Pr2
dAO	Delay of temperature alarm at start up	0 ÷ 23h e 50'	1,3	Pr2
AP2	Probe for temperat. alarm of condenser	nP; P1; P2; P3; P4	P4	Pr2
AL2	Condenser for low temperat. alarm	(-55 ÷ 150°C) (-67÷ 302°F)	-40	Pr2
AU2	Condenser for high temperat. alarm	(-55 ÷ 150°C) (-67÷ 302°F)	110	Pr2
AH2	Differ. for condenser temp. alar. recovery	[0,1°C ÷ 25,5°C] [1°F ÷ 45°F]	5	Pr2
Ad2	Condenser temperature alarm delay	0 ÷ 254 (min.) , 255=nU	15	Pr2
dA2	Delay of cond. temper. alarm at start up	0.0 ÷ 23h 50'	1,3	Pr2
bLL	Compr. off for condenser low temperature alarm	n(0) - Y(1)	n	Pr2
AC2	Compr. off for condenser high temperature alarm	n(0) - Y(1)	n	Pr2
tbA	Alarm relay disabling	n=no; y=yes	y	Pr2
oA3	Fourth relay configuration	ALr = alarm; dEF = do not select it; Lig =Light; AUS =AUX; onF=always on; Fan= do not select it; db = neutral zone; cP2 = second compressor; dF2 = do not select it; HES = night blind	Lig	Pr2
AoP	Alarm relay polarity (oA3=ALr)	oP; cL	cL	Pr2
i1P	Digital input polarity (13-14)	oP=opening;CL=closing	cL	Pr1
i1F	Digital input 1 configuration (13-14)	EAL, bAL, PAL, dor; dEF; Htr, AUS	dor	Pr1
did	Digital input alarm delay (13-14)	0÷255min	15	Pr1
i2P	Digital input polarity (13-19)	oP=opening;CL=closing	cL	Pr2
i2F	Digital input configuration (13-19)	EAL, bAL, PAL, dor; dEF; Htr, AUS	EAL	Pr2
d2d	Digital input alarm delay (13-19)	0÷255min	5	Pr2
Nps	Number of activation of pressure switch	0 ÷15	15	Pr2
odc	Compress and fan status when open door	no; Fan; CPr; F_C	F-c	Pr2
rrd	Regulation restart with door open alarm	n – Y	y	Pr2
HES	Differential for Energy Saving	(-30°C÷30°C) (-54°F÷54°F)	0	Pr2
Hur*	Current hour	0 ÷ 23	-	rtc
Min*	Current minute	0 ÷ 59	-	rtc
dAY*	Current day	Sun ÷ SAt	-	rtc
Hd1*	First weekly holiday	Sun÷ SAt – nu	nu	rtc
Hd2*	Second weekly holiday	Sun÷ SAt – nu	nu	rtc
ILE*	Energy Saving cycle start during workdays	0 ÷ 23h 50 min.	0	rtc
dLE*	Energy Saving cycle length during workdays	0 ÷ 24h 00 min.	0	rtc
ISE*	Energy Saving cycle start on holidays	0 ÷ 23h 50 min.	0	rtc
dSE*	Energy Saving cycle length on holidays	0 ÷ 24h 00 min.	0	rtc

Label	Name	Range	°C/°F	Level
Ld1*	1st workdays defrost start	0 ÷ 23h 50 min. - nu	6.0	rtc
Ld2*	2nd workdays defrost start	0 ÷ 23h 50 min. - nu	13.0	rtc
Ld3*	3rd workdays defrost start	0 ÷ 23h 50 min. - nu	21.0	rtc
Ld4*	4th workdays defrost start	0 ÷ 23h 50 min. - nu	0.0	rtc
Ld5*	5th workdays defrost start	0 ÷ 23h 50 min. - nu	0.0	rtc
Ld6*	6th workdays defrost start	0 ÷ 23h 50 min. - nu	0.0	rtc
Sd1*	1st holiday defrost start	0 ÷ 23h 50 min. - nu	6.0	rtc
Sd2*	2nd holiday defrost start	0 ÷ 23h 50 min. - nu	13.0	rtc
Sd3*	3rd holiday defrost start	0 ÷ 23h 50 min. - nu	21.0	rtc
Sd4*	4th holiday defrost start	0 ÷ 23h 50 min. - nu	0.0	rtc
Sd5*	5th holiday defrost start	0 ÷ 23h 50 min. - nu	0.0	rtc
Sd6*	6th holiday defrost start	0 ÷ 23h 50 min. - nu	0.0	rtc
Adr	Serial address	1÷247	1	Pr2
PbC	Kind of probe	Ptc; ntc	ntc	Pr2
onF	on/off key enabling	nu, oFF; ES	oFF	Pr2
dP1	Room probe display	--	-	Pr2
dP2	Evaporator probe display	--	-	Pr2
dP3	Third probe display	--	-	Pr2
dP4	Fourth probe display	--	-	Pr2
rSE	Real set	actual set	-	Pr2
rEL	Software release	--	1.8	Pr2
Ptb	Map code	--		Pr2

*** Only for model with real time clock**

[2] Only for XW60L with X-REP output

Dixell S.p.A. Z.I. Via dell'Industria, 27
32010 Pieve d'Alpago (BL) ITALY
tel. +39 - 0437 - 98 33 - fax +39 - 0437 - 98 93 13
E-mail: dixell@dixell.com - http://www.dixell.com