Open Deck Series

Food Display

Fridge

Display or Store

Display food and drink products to increase your high-margin impulse sales.

Our attractive open deck fridges, are designed to increase your convenience food sales. Your products are easy to access and displayed to their best advantage. The Open Deck range also offers you maximum space for your branding.

OD260

OD400

OD460

OD1100 high sign

OD1100 low sign

Standard finishes: White or black

Warranty
2 year protection

Food-Safe
Keeps food below 5°C

High Efficiency
Major Energy Savings

Compliance
Independently Verified

Best Suited to:

Restaurants / Cafés

Quick Service Restaurants

Clubs / Pubs / Bars

Quick Guide

Open Deck Series	
Premium build quality	✓
Ideal for high margin impulse sales	✓
High efficiency models	✓
SKOPE premium controller	✓
White or black	✓
Customisable	✓

Standard Features	Benefits
SKOPE premium controller	Easy to use with pre-programmed features
Night blind (OD260, 460 & 1100)	To significantly reduce power consumption
Easy to remove front panel	For easy cleaning & servicing
Auto defrost cycles	Optimal defrost convenience
Low noise fan system	Quiet operation

Options

- Stainless steel finish (OD1100 only)
- Full powdercoat colour range
- Gravity feed shelving
- Night Blind (OD260)
- 1 year extended warranty
- Security Grille (OD400 & OD1100)
- Side mirrors & high sign (OD1100)

Specifications

	OD260	OD400	OD460	OD1100
Fridge/Freezer - doors	**Fridge**	**Fridge**	**Fridge**	**Fridge**
Self Contained/Remote	**Self Contained**	**Self Contained**	**Self Contained**	**Self Contained**
Model ID	**OD260**	**OD400**	**OD460**	**OD1100**
External				
Dimensions (W x D x H mm)	650 x 735 x 1400	900 x 660 x 1400	1205 x 660 x 1300	1285 x 830 x 2015
Total floor area (m²)	0.48	0.59	0.8	1.05
Weight (kg)	140	135	150	282
Door	N/A	N/A	N/A	N/A
Electronic controller	Yes	Yes	Yes	Yes
Remote duty (Watts @ -30°C SST)	N/A	N/A	N/A	N/A
Breathes from / Expels air to	Front / back	Front / back	Front / back	Front / back
Cabinet construction	Powder coated galv steel	Powder coated galv steel	Powder coated galv steel	Powder coated galv steel
Drainage (plumbing required)	No	No	No	No
Internal				
Gross volume (litres)	230	251	386	1020
Lighting	2 x LED module	2 x LED module	2 x LED module	2 x T7 LED Tube
No. of shelves	3	3	3	5
Shelf design	White / Black	White / Black	White / Black	White / Black
Total shelf area (m²)	0.60	0.73	0.73	0.73
Performance				
MEPS category (M1-food & drinks, M2 drinks)	M1	M1	M1	M1
MEPS efficiency (kWh/24h/m2) @ Climate Class 3	10.6	13.15	10.57	14.15
TEC (kWh/24h) @ Climate Class 3	9.0	11.65	10.71	21.19
Temperature range	1°C to 5°C	2°C to 4°C	2°C to 4°C	0°C to 5°C
High efficiency model	Yes	Yes	Yes	Yes
Maximum ambient temperature	25°C (up to 60% relative humidity)	25°C (up to 60% relative humidity)	25°C (up to 60% relative humidity)	25°C (up to 60% relative humidity)
Climate Class rating	3	3	3	3
Refrigerant	R134A / 420g	R134a / 380g	R134a / 450g	R404A / 1100g
Total display area (m²)	0.85	0.89	1.01	1.50
Electrical				
Electrical power (kW)	0.74	0.96	0.96	1.39
Current draw (Amps)	3.2	4	4	5.8
10 Amp 3 pin plug	Yes	Yes	Yes	Yes
Light switch on controller	Yes	Yes	Yes	No

Line Drawings

OD260

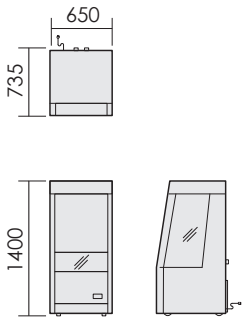

OD400

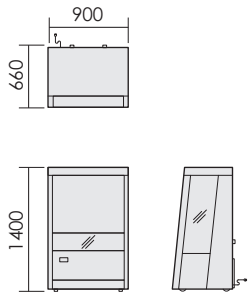

OD460

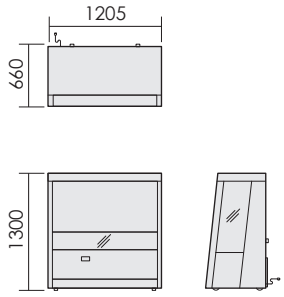

OD1100

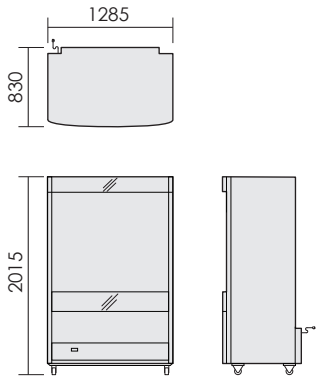

Cabinet height variation:
OD1100 with optional high sign, add 180mm

Ventilation required.

The product information presented is for guideline purposes only. Always refer to the latest product specification sheet for accuracy and detail, and allow for dimensional tolerances (see glossary).