Blast Chiller/Freezer 3 Trays GN 2/3

Code: **W3TGO**
Model: **W110200000**

Constructional data

Exterior/interior finishing:
• Stainless steel AISI 304 18/10
Insulation:
• 50 mm thickness - CFC/HCFC free
Interior:
• Structure in stainless steel wire AISI 304 Cr-Ni 18/10
Door:
• Hinges on left - with 180° dwell
Door frame:
• Magnetic
Door handle:
• Integrated
Door gasket:
• Magnetic, easy to replace

Features

• Dimensions	625×600×421 mm
• Packing dimensions	640×685×535 mm
• Net weight	46 kg
• Capacity	N. 2 pans 360×165×120 mm (not included)
• Blast chilling yield +90°+3°C	7 kg
• Deep-freezing yield +90°-18°C	5 kg
• Cooling capacity	635 W*
• Standard connection	230 V - 50 Hz
• Total rate	363 W - 2,2 A
• Cooling gas	R404a
• Blast chilling/deep-freezing mode	At preset time
• *Evap. -10°C cond. 45°C	

In order to constantly offer the best possible products, we reserve the right to make changes on technical specifications without incurring any obligation for equipment previously or subsequently sold.

Catering

Depth 600 mm

Blast Chiller/Freezer 3 Trays GN 2/3

The quick cold technology protects the food from bacterial attack, extends storage times and reduces the weight loss due to evaporation, maintaining the hallmark quality of your cooking.

FSS Fast Service System

FSS • Fast Service System

FSS • FAST SERVICE SYSTEM

• The bacteria normally present in a food product proliferate most easily in the temperature range between +65°C and +10°C. This is precisely the situation when a product that has just been cooked is allowed to cool at room temperature.

Focus

NO-COMPROMISE QUALITY STEEL

AISI 304

AISI 304 18/10 is a high quality steel. Its stability guarantees good-looking and durable products, ensuring maximum hygiene and corrosion resistance over time.

INSULATION THICKNESS

50 mm

The 50 mm thick insulation ensures lower heat loss, reduced work of the compressor, therefore lower energy consumption.

INTELLIGENT DEFROST

To defrost in a few minutes at the end of each cycle. Maximum efficiency conditions are restored in the next cycle to avoid waste of energy.

CORE PROBE

It makes the compressor run only for the time strictly necessary.

HIGH-EFFICIENCY FANS

They allow for a 30% energy saving compared to the traditional version.

ASPERA COMPRESSORS

Aspera compressors reduce energy consumption by 15% and acoustic impact by 5 dBA.

Technical drawing

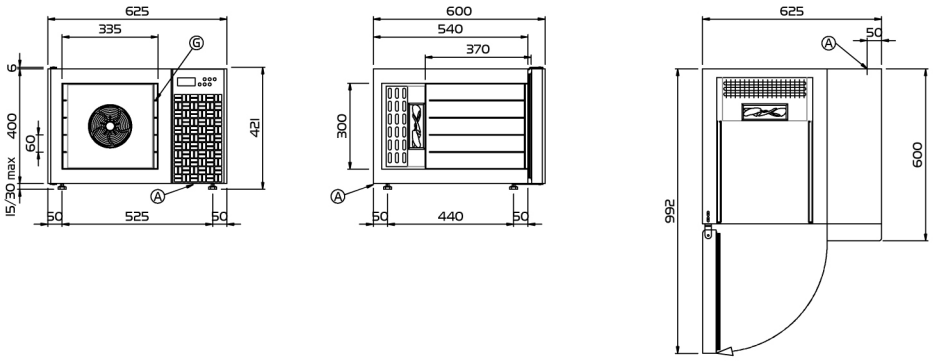

Ⓐ POWER SUPPLY CABLE OUTLET

Ⓖ RACKS PITCH

In order to constantly offer the best possible products, we reserve the right to make changes on technical specifications without incurring any obligation for equipment previously or subsequently sold.

coldline