Catering

Depth 700 mm

Blast Chiller/Freezer 5 Trays GN

Code: **W5TGO**
Model: **W110300000**

Constructional data

Exterior/interior finishing:
• Stainless steel AISI 304 18/10
Insulation:
• 60 mm thickness - CFC/HCFC free
Cover evaporator:
• Removable in stainless steel AISI 304 Cr-Ni 18/10
Interior:
• Structure in stainless steel wire AISI 304 Cr-Ni 18/10
Inner corners:
• Rounded cornes ensuring maximum hygiene
Feet:
• Stainless steel AISI 304 adjustable 100-150 mm
Door:
• Self-closing, with 105° dwell
Door frame:
• Anti-condensation system
Door handle:
• Stainless steel AISI 304 thick 2 mm
Door gasket:
• Magnetic, easy to replace
Top:
• Reinforced overlap oven
Electrical panel:
• Pull-out

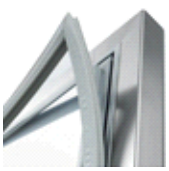

Features

• Dimensions	710×700×840 mm
• Packing dimensions	730×730×895 mm
• Net weight	95 Kg
• Blast chilling yield +90°+3°C	14 kg
• Deep-freezing yield +90°-18°C	10 kg
• Cooling capacity	1528 W*
• Standard connection	230 V - 50 Hz
• Total rate	886 W - 4,9 A
• Cooling gas	R404a
• Blast chilling/deep-freezing mode	With core probe and at preset time
• Standard equipment	Rack structure GN1/1 in stainless steel wire
	N. 11 positions - Pitch 24 mm
	Drain plug

Accessories

HACCP recorder for Blast Chillers/Freezers
Code O842000040

Kit Sterilizing UV lamp for Blast Chillers/Freezers
Code O923200020

Kit heated needle probe for Blast Chillers/Freezers
Code O923100020

Kit of 4 swivel and brake castors in stainless steel AISI 304
Code O444000020

In order to constantly offer the best possible products, we reserve the right to make changes on technical specifications without incurring any obligation for equipment previously or subsequently sold.

Catering

Depth 700 mm

Blast Chiller/Freezer 5 Trays GN

Coldline made major investments in design research, becoming a leader in technology and innovation. Each cabinet marked with the FSSsymbol is equipped with a refrigeration system independent of the structure, which provides improved flexibility and service.

FSS • Fast Service System

FSS • FAST SERVICE SYSTEM

- You can change the intended use of an appliance, a freezer into a chiller - and the other way around - even after years of installation.
- You can extend the life of a refrigeration cabinet by replacing its old refrigeration system with a new one.
- Maintenance and service are simple, quick and do not require specialised personnel.

Focus

NO-COMPROMISE QUALITY STEEL

AISI 304 18/10 is a high quality steel. Its stability guarantees good-looking and durable products, ensuring maximum hygiene and corrosion resistance over time.

INSULATION THICKNESS

The 60 mm thick insulation ensures lower heat loss, reduced work of the compressor, therefore lower energy consumption.

HOT GAS DEFROST

To defrost in a few minutes at the end of each cycle. Maximum efficiency conditions are restored in the next cycle to avoid waste of energy.

CORE PROBE

It makes the compressor run only for the time strictly necessary.

HIGH-EFFICIENCY FANS

They allow for a 30% energy saving compared to the traditional version.

ASPERA COMPRESSORS

Aspera compressors reduce energy consumption by 15% and acoustic impact by 5 dBA.

Technical drawing

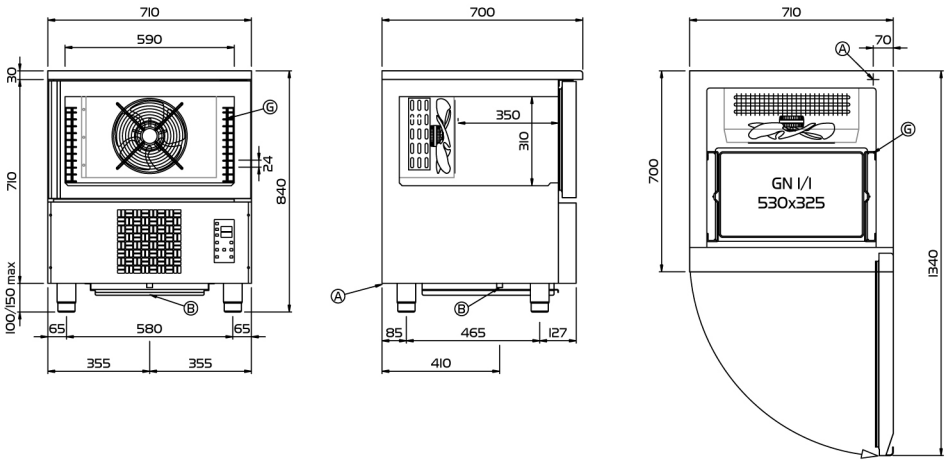

Ⓐ POWER SUPPLY CABLE OUTLET

Ⓑ CONDENSATION WATER DRAIN WITH REMOVABLE BASIN

Ⓖ RACKS PITCH

In order to constantly offer the best possible products, we reserve the right to make changes on technical specifications without incurring any obligation for equipment previously or subsequently sold.