# Catering

Depth 800 mm

# Blast Chiller/Freezer 10 Trays GN

Code: **W10TGN**
Model: **W111000000**

## Constructional data

**Exterior/interior finishing:**
• Stainless steel AISI 304 18/10
**Insulation:**
• 60 mm thickness - CFC/HCFC free
**Cover evaporator:**
• Removable in stainless steel AISI 304 Cr-Ni 18/10
**Interior:**
• Structure in stainless steel wire AISI 304 Cr-Ni 18/10
**Inner corners:**
• Rounded cornes ensuring maximum hygiene
**Feet:**
• Stainless steel AISI 304 adjustable 100-150 mm
**Door:**
• Self-closing, with 105° dwell
**Door frame:**
• Anti-condensation system
**Door handle:**
• Stainless steel AISI 304 thick 2 mm
**Door gasket:**
• Magnetic, easy to replace
**Top:**
• Reinforced overlap oven
**Electrical panel:**
• Pull-out

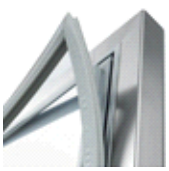

## Features

| | |
|---|---|
| • Dimensions | 780×800×1545 mm |
| • Packing dimensions | 800×830×1600 mm |
| • Net weight | 190 Kg |
| • Blast chilling yield +90°+3°C | 40 kg |
| • Deep-freezing yield +90°-18°C | 28 kg |
| • Cooling capacity | 5211 W* |
| • Standard connection | 400 V 3 N - 50 Hz |
| • Total rate | 3345 W - 6,2 A |
| • Cooling gas | R404a |
| • Blast chilling/deep-freezing mode | With core probe and at preset time |
| • Standard equipment | N. 10 pair of slides GN1/1 Pitch 75 mm |
| | Drain plug |
| • *Evap. -10°C cond. 45°C | |

## Accessories

Plastic coated shelf EN 600×400 mm
Code O222400600

Pair of slides type L - 402 mm GN/EN
Code O121240220

HACCP recorder for Blast Chillers/Freezers
Code O842000040

Kit Sterilizing UV lamp for Blast Chillers/Freezers
Code O923200020

Kit heated needle probe for Blast Chillers/Freezers
Code O923100020

Kit of 4 swivel and brake castors in stainless steel AISI 304
Code O444000020


In order to constantly offer the best possible products, we reserve the right to make changes on technical specifications without incurring any obligation for equipment previously or subsequently sold.

# Catering

Depth 800 mm

# Blast Chiller/Freezer 10 Trays GN

Coldline made major investments in design research, becoming a leader in technology and innovation. Each cabinet marked with the FSSsymbol is equipped with a refrigeration system independent of the structure, which provides improved flexibility and service.

## FSS • Fast Service System

**FSS • FAST SERVICE SYSTEM**

- You can change the intended use of an appliance, a freezer into a chiller - and the other way around - even after years of installation.
- You can extend the life of a refrigeration cabinet by replacing its old refrigeration system with a new one.
- Maintenance and service are simple, quick and do not require specialised personnel.

## Focus

**NO-COMPROMISE QUALITY STEEL**

AISI 304 18/10 is a high quality steel. Its stability guarantees good-looking and durable products, ensuring maximum hygiene and corrosion resistance over time.

**INSULATION THICKNESS**

The 60 mm thick insulation ensures lower heat loss, reduced work of the compressor, therefore lower energy consumption.

**HOT GAS DEFROST**

To defrost in a few minutes at the end of each cycle. Maximum efficiency conditions are restored in the next cycle to avoid waste of energy.

**CORE PROBE**

It makes the compressor run only for the time strictly necessary.

**HIGH-EFFICIENCY FANS**

They allow for a 30% energy saving compared to the traditional version.

**ASPERA COMPRESSORS**

Aspera compressors reduce energy consumption by 15% and acoustic impact by 5 dBA.

## Technical drawing

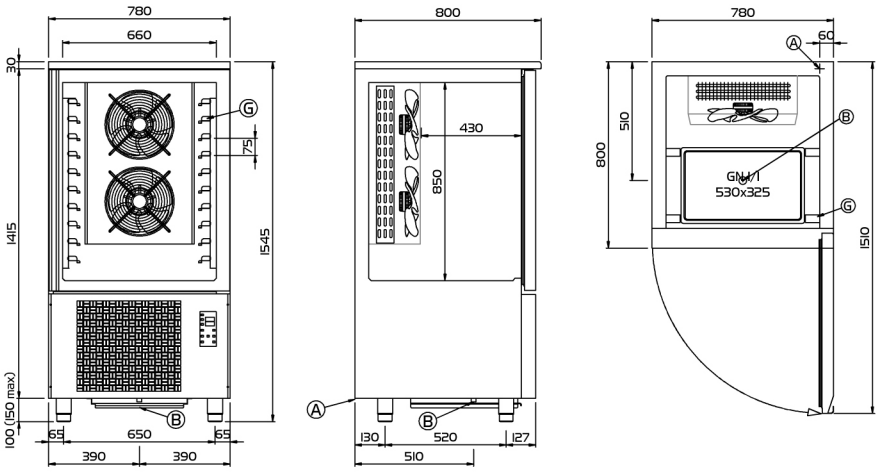


Ⓐ POWER SUPPLY CABLE OUTLET

Ⓑ SCARICO CONDENSA CON VASCHETTA RACCOLA ESTRAIBILE

Ⓖ RACKS PITCH



In order to constantly offer the best possible products, we reserve the right to make changes on technical specifications without incurring any obligation for equipment previously or subsequently sold.