MultiFresh®

More than Fresh.

IRINOX

MF 180.2

The condensing unit is remote

Organize your production and processes with flexibility 24 hours a day.

YIELD PER CYCLE

from +90°C to +3°C	180 kg
from +90°C to -18°C	180 kg

CAPACITY

Trolleys n.	1x20 (GN 2/1 o 600x800 mm)
Trolleys n.	1x40 (GN 1/1 o 600x400 mm)

DIMENSIONS

width	1600 mm
depth	1425 mm
height	2150 mm
weight	480 kg

ELECTRICAL DATA STANDARD VERSION

max absorbed power	2,2 kW
max absorbed current	4,2 A
voltage	400 V-50Hz (3N+PE)

ELECTRICAL DATA PLUS VERSION

max absorbed power	10,9 kW
max absorbed current	15,9 A
voltage	400 V-50Hz (3N+PE)

CONDENSING UNIT M924

max absorbed power	13,8 kW
max absorbed current	25,9 A
voltage	400 V-50Hz (3N+PE)
width	1237 mm
depth	1032 mm
height	1670 mm
weight	430 kg

UNIQUE SELLING POINTS

IRINOX

MYA, TOUCH SCREEN INTERFACE

MultiFresh® comes with *MyA*, a **touch screen interface with 7"** screen which makes using the machine simple, even for inexperienced operators. The **intuitive icons** give access to the **numerous functions** provided by MultiFresh® for optimum control of all the production processes.
MyA is used to **customize all the parameters for each cycle** – ventilation, time, temperature, etc. – to create the ideal process for each item.

BLAST CHILLING AND SHOCK FREEZING CYCLES

MultiFresh® chills to +3°C and freezes to -18°C **from any temperature, including boiling hot products,** maintaining the consistency, moisture and nutrients of each type of food. MultiFresh® rapidly goes through the temperature range of **+90°C to +70°C, fundamental for quality**, and **+40°C to +10°C, to limit bacterial proliferation.** It freezes to **-18°C**, guaranteeing the **formation of micro-crystals** that do not spoil the structure of the food.

THAWING/REGENERATING CYCLES (PLUS version only)

MultiFresh® allows you to **choose the temperature, time and thickness** at which the food should be thawed and ready for use, by means of **controlled ventilation** in the chamber. Controlling the thawing process and setting the right temperature slows down bacterial proliferation and **keeps the structure of food intact.**

PROOFING CYCLES (PLUS version only)

MultiFresh® provides **cycles for natural proofing** that maintains the product's moisture, without sudden changes in temperature. MyA is used to plan the time at which to have perfectly proofed products and parameters are easily set to create the ideal environment for proofing. At the end of the cycle **products can be proofed and blast chilled or shock frozen,** as required.

LOW TEMPERATURE COOKING CYCLES (PLUS version only)

MultiFresh® **cooks meat or fish at low temperature, going automatically on to blast chilling or shock freezing** immediately after cooking. The main advantages of this method are exalted flavour and more uniform cooking.
For ice cream makers and confectioners MultiFresh® provides **cooking cycles for meringues or fruit in syrup** used to make bases for single portions, semifreddos and dacquoise in-house, and better manage production costs.

REGENERATION CYCLES (PLUS version only)

MultiFresh® is used to regenerate dishes by setting the temperature and time at which the product must be hot, **ready to serve, going automatically from +3°C or -18°C to regeneration** to the required temperature, without spoiling it.

HOLDING CYCLES (catering and ice cream makers only) (PLUS version only)

MultiFresh® keeps food intact **at the required temperature, positive or negative**, according to needs.

CHOCOLATE CYCLES (confectioners and ice cream makers) (PLUS version only)

MultiFresh® comes with **cycles dedicated to chocolate**, which keep it at the **right level of moisture and temperature for perfect preservation over a long period**. MultiFresh® **melts and holds several types of chocolate,** reducing waiting time. It **partially freezes (at -7°C)** pralines and chocolate decorations and gives a velvety finish to chocolate figures. It rapidly **chills chocolate in moulds** so that it is quickly available and moisture does not form on the product.

PASTEURIZATION (PLUS version only)

MultiFresh® **pasteurizes and blast chills (+3°C) or pasteurizes and shock freezes (-18°C)** so that products can be held longer.

MAXIMUM FLEXIBILITY

MultiFresh® is easily set up for all food business areas - *Catering, Confectioners, Ice Cream Makers and Bakers* – with a choice of numerous functions for each sector – *Chilling, Freezing, Thawing, Reconstitution, Proofing, Low Temperature Cooking, Chocolate, Holding, Regeneration and Pasteurization.*
On request model MF 180.2C, a special freezer with a more powerful remote condenser unit, is available

IRINOX BALANCE SYSTEM®:

The principle on which blast chillers operate consists of removing heat from food in the shortest time possible in order to limit product ageing. Our blast chillers guarantee **the fastest heat removal, also with boiling hot food,** due to the Irinox Balance System®, i.e. **the perfect size of the main refrigerator components** (condenser, evaporator, compressor and fan).

UNIQUE SELLING POINTS

IRINOX

▪ **Condenser**

Condensers are built to the drawings and specifications of Irinox R&D and have **large exchange surfaces** to guarantee **high performance even with high ambient temperatures.** They are built to reduce acoustic impact and the amount of refrigerant involved.

▪ **Evaporator**

Built to the drawings and specifications of Irinox R&D with **large heat exchange surfaces** to prevent food dehydration. A Multi-injection system ensures good performance and **cataphoresis** anti-corrosion treatment prolongs the life of the evaporator.

▪ **Compressor**

The compressors selected by Irinox guarantee **low energy consumption and great reliabilit**y and meet their stated productivity.

▪ **Ventilators**

The new generation **variable speed fans** with innovative design and materials are **exclusive to Irinox**. They provide **uniform ventilation and controlled humidity** throughout the chamber. The system that stops the fan immediately when the door is opened avoids loss of cold with the door open.

SANIGEN®: SANIFICATION 24/7

The Irinox patented sanitization system **sanitizes every part of the chamber,** including the **areas difficult to access for cleaning** (e.g. the evaporator).

The system's efficiency, tested by Udine University and **certified by the Italian Ministry of Health**, guarantees **bacteria abatement of 99.5%**. *Sanigen®* also acts to **eliminate unpleasant odours** that can occur at the end of the work cycle or the working day.

MULTISENSOR®

MultiFresh® comes with a *MultiSensor®* **5-point probe** for perfect temperature control. **Core temperature readings** provide *MyA* software with extremely precise indications which allow prompt **regulation of ventilation, temperature and humidity** in the chamber. The special shape of the *MultiSensor®* probe makes it **easy to remove from food** without spoiling any part of it and without the need to overheat it. The Irinox patented system of **automatic attachment to the door** facilitates its use and prevents malfunctioning.

MANUAL DEFROSTING

MultiFresh® can be defrosted manually at the end of the day. It does not **defrost automatically during the work cycle in progress** because it is constantly able to remove all the heat from the chamber, even when it contains boiling hot food, and this prevents the formation of ice on the evaporator.

IRINOX MANUFACTURING QUALITY

Below are some details of the manufacture and functions of MultiFresh®:

▪ **Soft closing magnetic door closure,** softened by a high/low temperature resistant gasket.

▪ **Automatic switch from manual mode (timed) to automatic mode (with probe);** MultiFresh® senses if the probe has been inserted or not.

▪ **Wireless** data transfer to easily download and save work process data on dedicated software **(Haccp Control Software).**

▪ **Maximum cleanliness and hygiene** due to rounded corners and components situated in the chamber so that they can be accessed and cleaned easily.

▪ **Compact condenser units** can also be provided on request in different versions: water, air, super silent and remote.

▪Refrigerant gas R404.

IRINOX CERTIFICATION:

▪ **CE:** Certification that the product complies with the relevant European legislation and may therefore circulate freely in the member states of the European Union.

▪ **GOST R:** GOST-R certification for products to be exported to Russia

▪ **TÜV / PED (Pressure Equipment Directive).**
Certificate number:
TIS-PED-MI-12-05-001918-5534

▪ **EMC conformity test** (performed by an accredited third party laboratory): conformity to Directive 2004/108/CE regarding Electromagnetic Compatibility (EMC) is a compulsory requisite in Europe for obtaining the CE mark and is now becoming obligatory for an increasing number of products in countries outside the EU.

UNIQUE SELLING POINTS

- **LVD conformity test** (performed by an accredited third party laboratory): conformity to the Low Voltage Directive.

FRONT VIEW

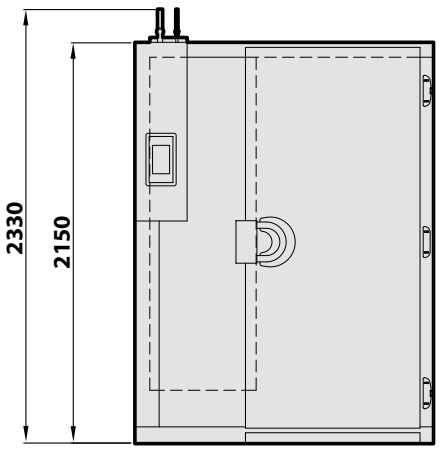

SIDE VIEW

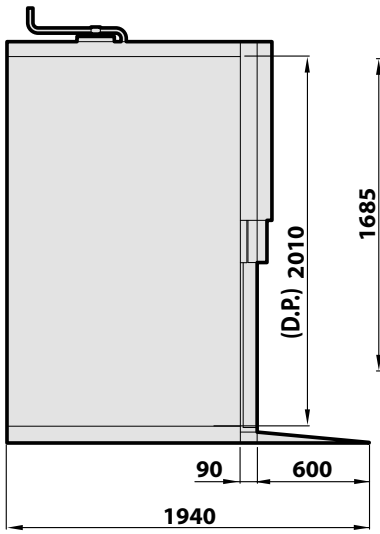

TOP VIEW

(D.P.) = Door passage

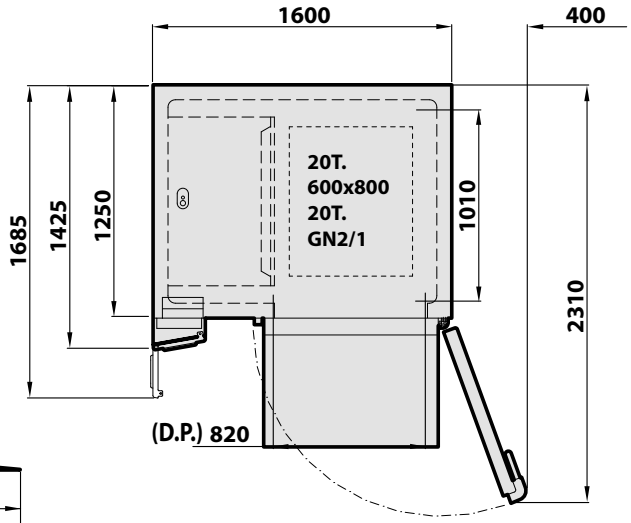

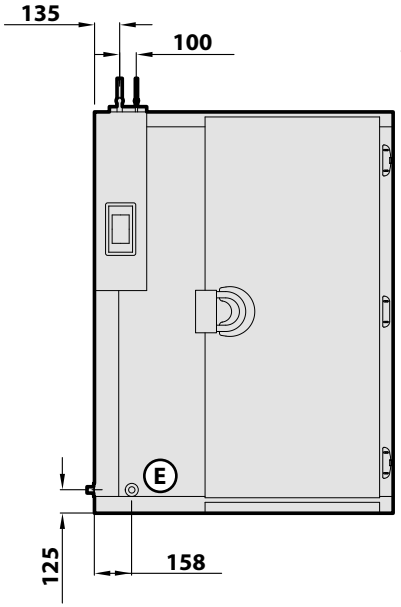

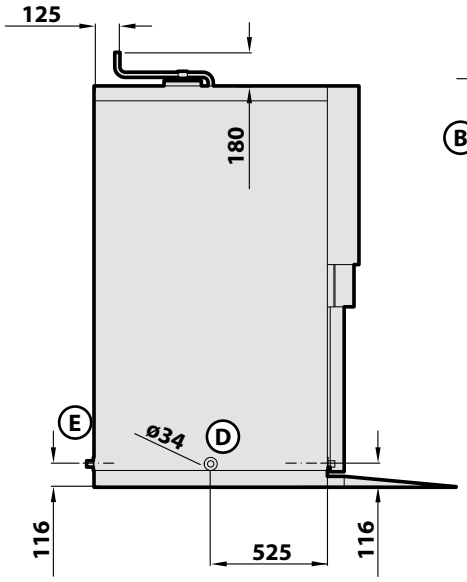

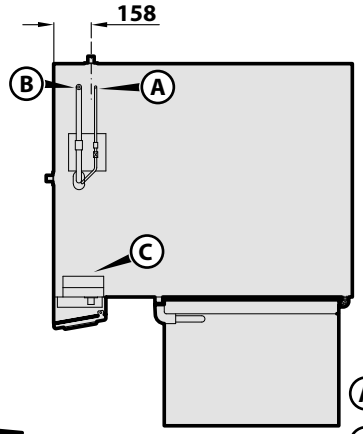

DRAIN POSITION

Model / Voltage		400V 3N+PE	400V 3N+PE	230V 3+PE	230V 3+PE	200V 3+PE 208V 3+PE
		50Hz	**60Hz**	**50Hz**	**60Hz**	**50/60Hz**
Total rating:	KW	10,9	10,9	-	-	-
Total output:	A	15,9	15,9	-	-	-
Supply cable size:	mm^2	5G4	5G4	-	-	-
To remote condensing unit cable size:	mm^2	7x4	7x4	7x4	7x4	7x4
Gas type / Nominal gas charge		R404A				
Liquid line connection	mm	ø16				
Suction line connection	mm	ø35				
Maximum ambient air temperature	°C	32				
Cabinet weight	Kg	-				
Yeld for blast chilling cycle (90/+3°C)*	Kg	180				
Yeld for shock freezing cycle (90/-18°C)**	Kg	180				
***: within 90 min.**		****: within 240 min.**				

(A) Liquid line connection

(B) Suction line connection

(C) Supply and communication cables inlet

(D) Drainage discharge standard

(E) Drainage discharge on demand

measurement in millimeters

IRINOX

Mod.: **MF2023001R**

Ed.: **07/13**

Rev.: **00** **MYA**

★ Main power cable

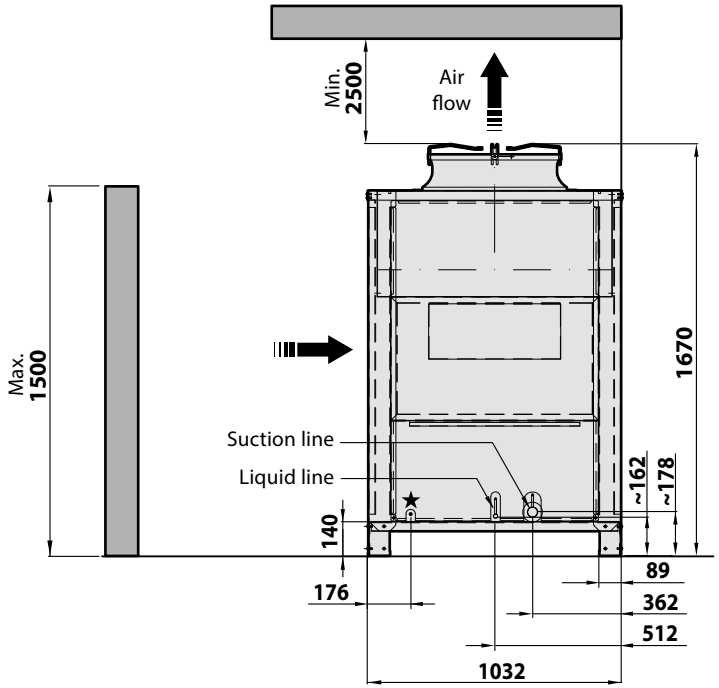

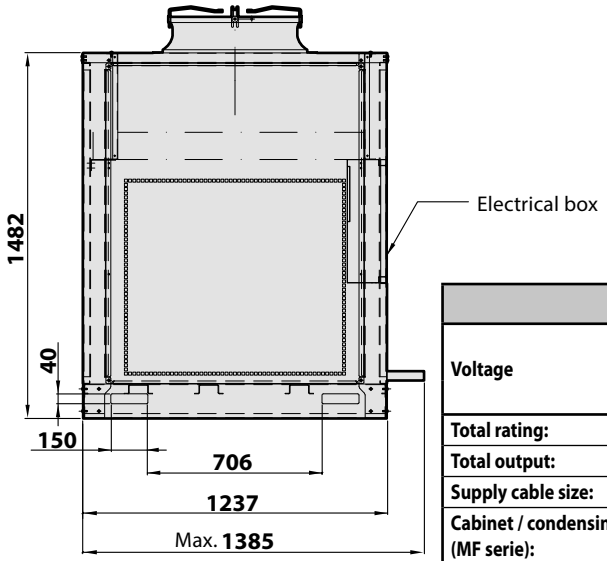

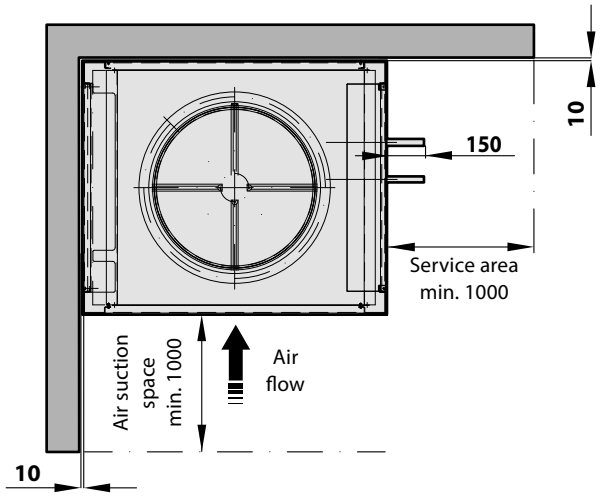

REMOTE UNIT FEATURES

Voltage		400V 3N+PE	230V 3+PE	400V 3N+PE 400V 3+PE
		50Hz	**60Hz**	**60Hz**
Total rating:	KW	13,8	16,7	16,7
Total output:	A	25,9	55,8	32,6
Supply cable size:	nxmm²	5G6	4G35	5G10 / 4G10
Cabinet / condensing unit connection cable (MF serie):	nxmm²	7x1,5	7x1,5	7x1,5
Compressor rating:	kW (HP)	8,8 (12)	8,8 (12)	8,8 (12)
Refrigeration Yield (-10°C evap./+40°C cond)	Watt	22600	27200	27200
Condensator rating (-10°C evap./+40°C cond)	Watt	31300	37800	37800
Gas type:		R404A	R404A	R404A
Liquid line connection:	mm	ø 16	ø 16	ø 16
Suction line connection:	mm	ø 35	ø 35	ø 35
Compressor displacement:	m³/h	41,33	49,88	49,88
Minimum air circulation:	m³/h	10000	10000	10000
Maximum ambient air temperature:	°C	42	42	42
Dimensions with packing (WxDxH):	mm	1530x1120x2000		
Weight with packing:	kg	440	440	440
Volume with packing:	m³	3,427	3,427	3,427
Net weight:	Kg	360	360	360

measurement in millimeters

IRINOX

Mod.: **M9240xxx**

Ed.: **05/13**

Rev.: **00**