specifications

BC070-CB

centaur from SKOPE

SKOPE Centaur Single Door Under Counter
Type: B070-CB-1R00S-E

CABINET DIMENSIONS

	External	Internal
Height:	840mm	560mm
Width:	706mm	570mm
Depth:	725mm*	530mm
Floor area:	0.51m^2	

*Including 25mm rear spacer

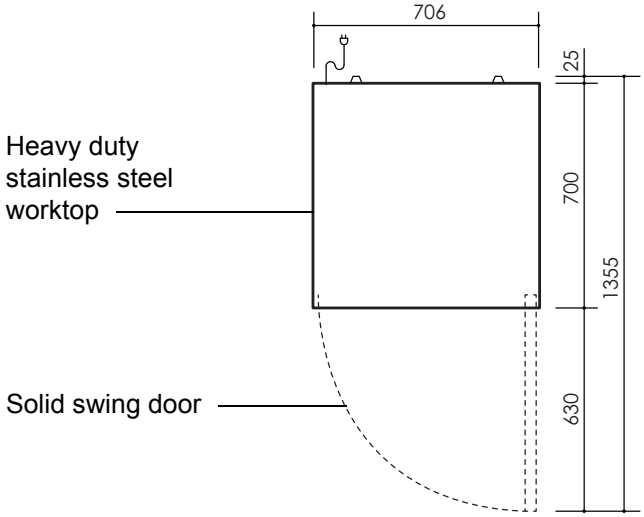

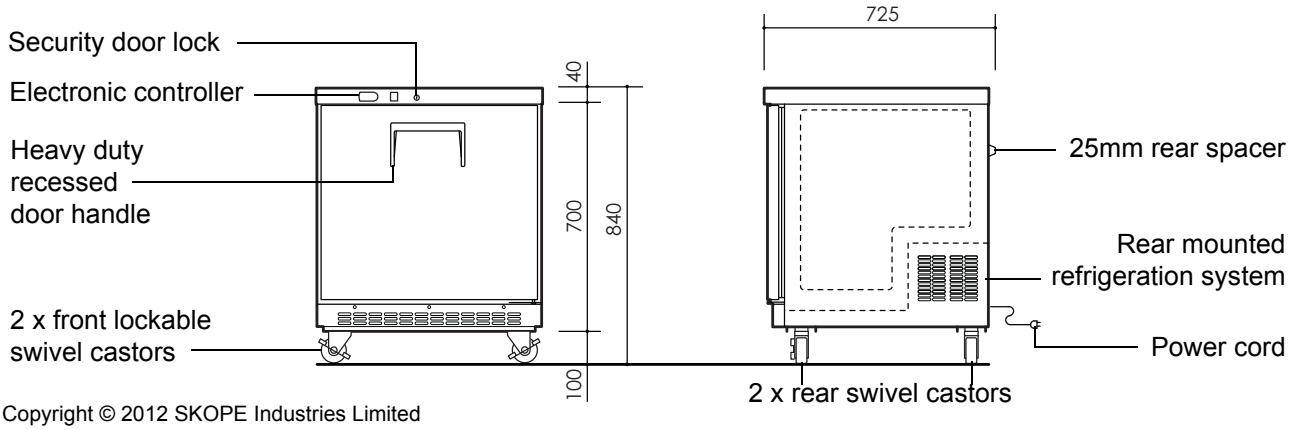

Copyright © 2012 SKOPE Industries Limited

CABINET SPECIFICATIONS

Refrigeration system:	Rear mounted, integral refrigeration system
Electronic controller:	CAREL ‘easy’ electronic controller
Refrigerant:	R134a / 240g
Nominal compressor capacity:	192 Watts
Cabinet internal volume:	149 litres
Insulation:	60mm thick, high density cyclo-isopentane polyurethane foam
Operating temperature:	0°C to +5°C up to 30°C ambient
Electrical:	230-240 Volts a.c. 50 Hz, Chiller: 2.14 Amps
Internal lighting:	n.a.
Power cord:	2m flexible power cord with 3-pin plug
Doors:	1 x solid, stainless steel, self-closing door - RH hinged
Internal door opening size:	1 x door opening: 526mm high x 586mm wide
Shelves:	2 x adjustable height shelves: Top shelf 575mm wide x 520mm deep, bottom shelf: 575mm x 275mm
Weight:	78 kg

SKOPE Industries Limited reserve the right to alter specifications without notice.

PSS0300 Rev. 1.0 Jul. 2012

ISO 9001 BUREAU VERITAS Certification

SKOPE INDUSTRIES LIMITED
New Zealand Freephone: 0800 947 5673, Fax: (03) 983 3896. Australian Freephone: 1800 121 535, Freefax: 1800 121 533
Email: enquiry@skope.co.nz Website: www.skope.co.nz