SKOPE®

PREMIUM RANGE

Your guide to MISA standard modular cool and freezer rooms

For optimum efficiency, hygiene, flexibility and value, choose MISA modular polyurethane cool and freezer rooms.

misa

skope.com

Specification - Standard Rooms

Standard sizes	9 x Cool rooms 4 x Freezer rooms
Room Heights (Internal)	2 metres 2.4 metres
Flooring	250kg roll-in
Door Swing	Right-hand hinge (600 & 800mm)
Panel	Polyurethane foam (PUR)
Ambient Conditions	Up to 43°c
Optional MISA Freeblock Refrigeration System	Standard Heavy duty

Standard Room Features

Right-hand swing hinge door

P250kg roll-in flooring

Polyurethane panel (PUR)

Key lock & internal safety release

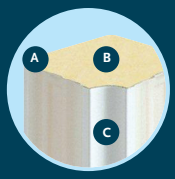

MISA patented edge with integrated covering

A - External rounded edge
B - Polyurethane foam
C - Internal coved corner

Rounded corner cap

Internal coved corners and external rounded corners

Durable and adjustable door hinges

Cool Rooms -

Nine Standard Room Sizes

Rooms available in 2 heights

2 or 2.4 metres (Internal)

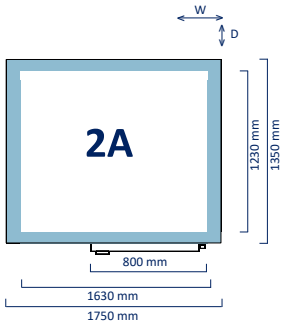

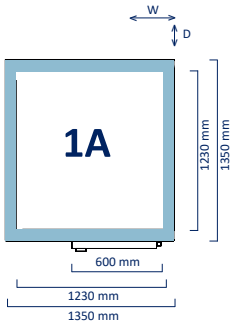

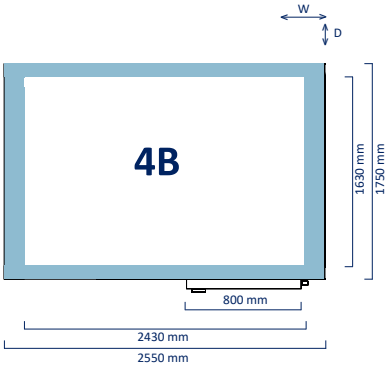

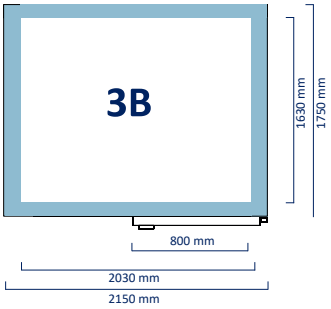

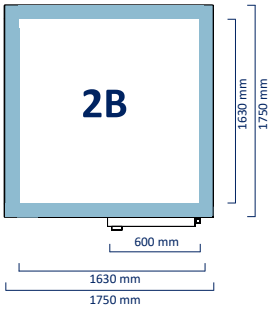

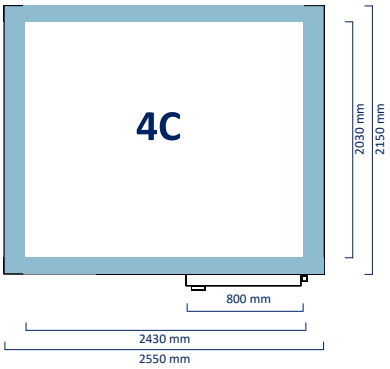

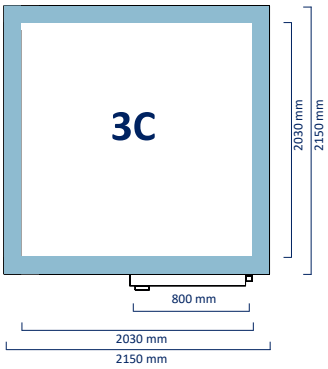

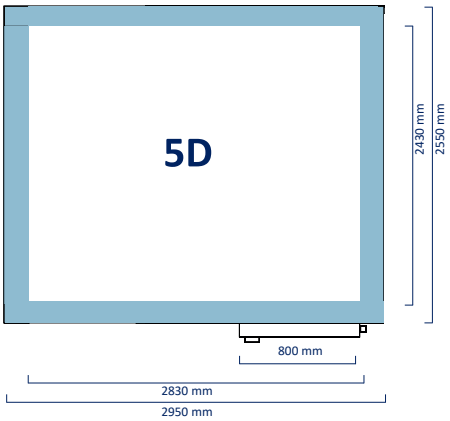

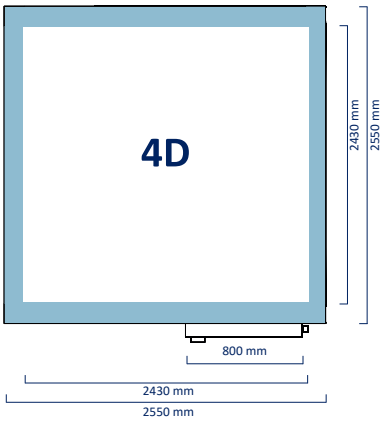

Freezer Rooms -

Four Standard Room Sizes

Rooms available in 2 heights

2 or 2.4 metres (Internal)

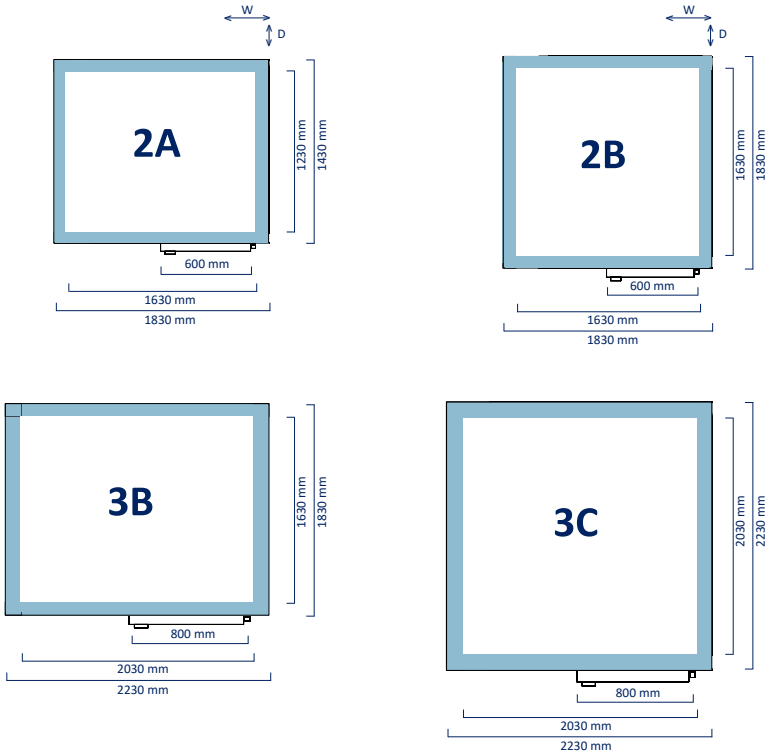

SKOPE Freeblock Recommendation

		Standard	Heavy Duty
Door openings	Less than 6/hr over 4 hours	✓	×
	Above 6/hr over 4 hours	×	✓
Ambient Temperature	Up to 32°c	✓	×
	Between 32°c - 43°c	×	✓
Daily Product Handling	30 - 35kg/m³	✓	×
	over 35kg/m³	×	✓

SKOPE standard ranges are shown in this document.
For requirements outside of these standard rooms, contact your local SKOPE stockist.

MISA Cool and Freezer Room Benefits

Energy Savings

Patented technology-MSV (MISA Vacuum System) provides excellent insulation properties to reduce power costs.

Insurance Costs

Potentially benefit from reduced insurance premiums due to the Fire Retardant properties of the polyurethane panel.

Food Safety

A HACCP Certified product; incorporating MISA Food Defense- an innovative permanent active anti-bacterial system within the panel coating

Long-life Asset

As a flexible solution it can be easily updated, moved or relocated if circumstances change, maximizing the life of the room.

Combo Rooms

Ask about the SKOPE custom room options.

Quality Finish

Non-toxic tough plastic surface is significantly stronger and more durable than pre-painted resulting in a long life, scratch and rust resistant finish.

Quick & Convenient

Built in a matter hours with quick on-site assembly, no messy panel cutting and limited expertise needed using MISA patented Fast-Fit System.

Fully Compliant

ISO 9001
Certified Quality System.
MISA cool and freezer rooms comply with the Australian and New Zealand building code, the Australian Food Safety Standard 3.2.3 (food premises and equipment) and the Australian Standard AS 4674-2004 (design, construction and fitout of food premises).

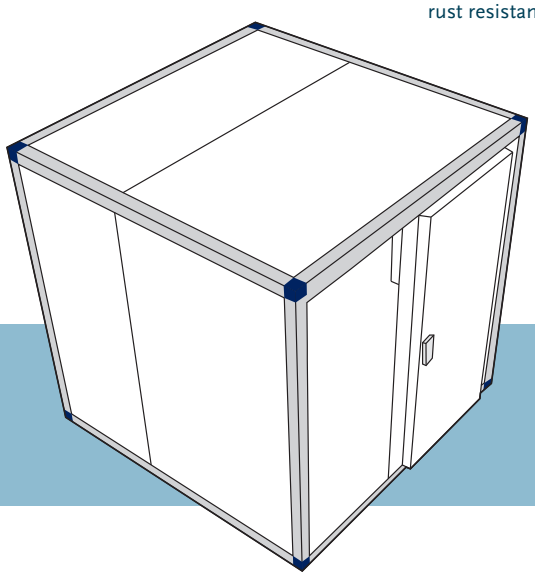

Learn more
skope.com/MISA

Warranty
2 year protection*

*2 year parts & 1 year labour if installed by a SKOPE approved MISA installer

HACCP Certified

MISA Commercial Cold Rooms are certified as food safe refrigeration units that are suitable for use in facilities that operate in accordance with a HACCP based Food Safety Programme

Email enquiry@skope.com
Freephone AUS 1800 121 535
Freephone NZ 0800 947 5673
Learn more at skope.com

Standard Room Sizes Summary

Footprint Reference	Model Number	External Dimensions	Internal Dimensions	Optional Freeblock	
		W x D x H (mm)	W x D x H (mm)	Standard	Heavy Duty
2m High					
Cooler					
1A	M-1A20-C	1350 x 1350 x 2150	1230 x 1230 x 2030	FB03G/6	FB03G/6
2A	M-2A20-C	1750 x 1350 x 2150	1630 x 1230 x 2030	FB03G/6	FB03G/6
2B	M-2B20-C	1750 x 1750 x 2150	1630 x 1630 x 2030	FB07G/6	FB07G/6
3B	M-3B20-C	2150 x 1750 x 2150	2030 x 1630 x 2030	FB07G/6	FB13G/6
3C	M-3C20-C	2150 x 2150 x 2150	2030 x 2030 x 2030	FB13G/6	FB16G/6
4B	M-4B20-C	2550 x 1750 x 2150	2430 x 1630 x 2030	FB13G/6	FB16G/6
4C	M-4C20-C	2550 x 2150 x 2150	2430 x 2030 x 2030	FB16G/6	FB16G/6
4D	M-4D20-C	2550 x 2550 x 2150	2430 x 2430 x 2030	FB16G/6	FB20G/6
5D	M-5D20-C	2950 x 2550 x 2150	2830 x 2430 x 2030	FB20G/6	FB20G/6
Freezer					
2A	M-2A20-F	1830 x 1430 x 2230	1630 x 1230 x 2030	FB06N/10	FB06N/10
2B	M-2B20-F	1830 x 1830 x 2230	1630 x 1630 x 2030	FB06N/10	FB06N/10
3B	M-3B20-F	2230 x 1830 x 2230	2030 x 1630 x 2030	FB13N/10	FB20N/10
3C	M-3C20-F	2230 x 2230 x 2230	2030 x 2030 x 2030	FB13N/10	FB20N/10
2.4m High					
Cooler					
1A	M-1A24-C	1350 x 1350 x 2550	1230 x 1230 x 2430	FB03G/6	FB03G/6
2A	M-2A24-C	1750 x 1350 x 2550	1630 x 1230 x 2430	FB03G/6	FB03G/6
2B	M-2B24-C	1750 x 1750 x 2550	1630 x 1630 x 2430	FB07G/6	FB13G/6
3B	M-3B24-C	2150 x 1750 x 2550	2030 x 1630 x 2430	FB13G/6	FB16G/6
3C	M-3C24-C	2150 x 2150 x 2550	2030 x 2030 x 2430	FB16G/6	FB16G/6
4B	M-4B24-C	2550 x 1750 x 2550	2430 x 1630 x 2430	FB16G/6	FB16G/6
4C	M-4C24-C	2550 x 2150 x 2550	2430 x 2030 x 2430	FB16G/6	FB20G/6
4D	M-4D24-C	2550 x 2550 x 2550	2430 x 2430 x 2430	FB20G/6	FB20G/6
5D	M-5D24-C	2950 x 2550 x 2550	2830 x 2430 x 2430	FB20G/6	FB26G/6
Freezer					
2A	M-2A24-F	1830 x 1430 x 2630	1630 x 1230 x 2430	FB06N/10	FB06N/10
2B	M-2B24-F	1830 x 1830 x 2630	1630 x 1630 x 2430	FB13N/10	FB13N/10
3B	M-3B24-F	2230 x 1830 x 2630	2030 x 1630 x 2430	FB13N/10	FB20N/10
3C	M-3C24-F	2230 x 2230 x 2630	2030 x 2030 x 2430	FB13N/10	FB20N/10