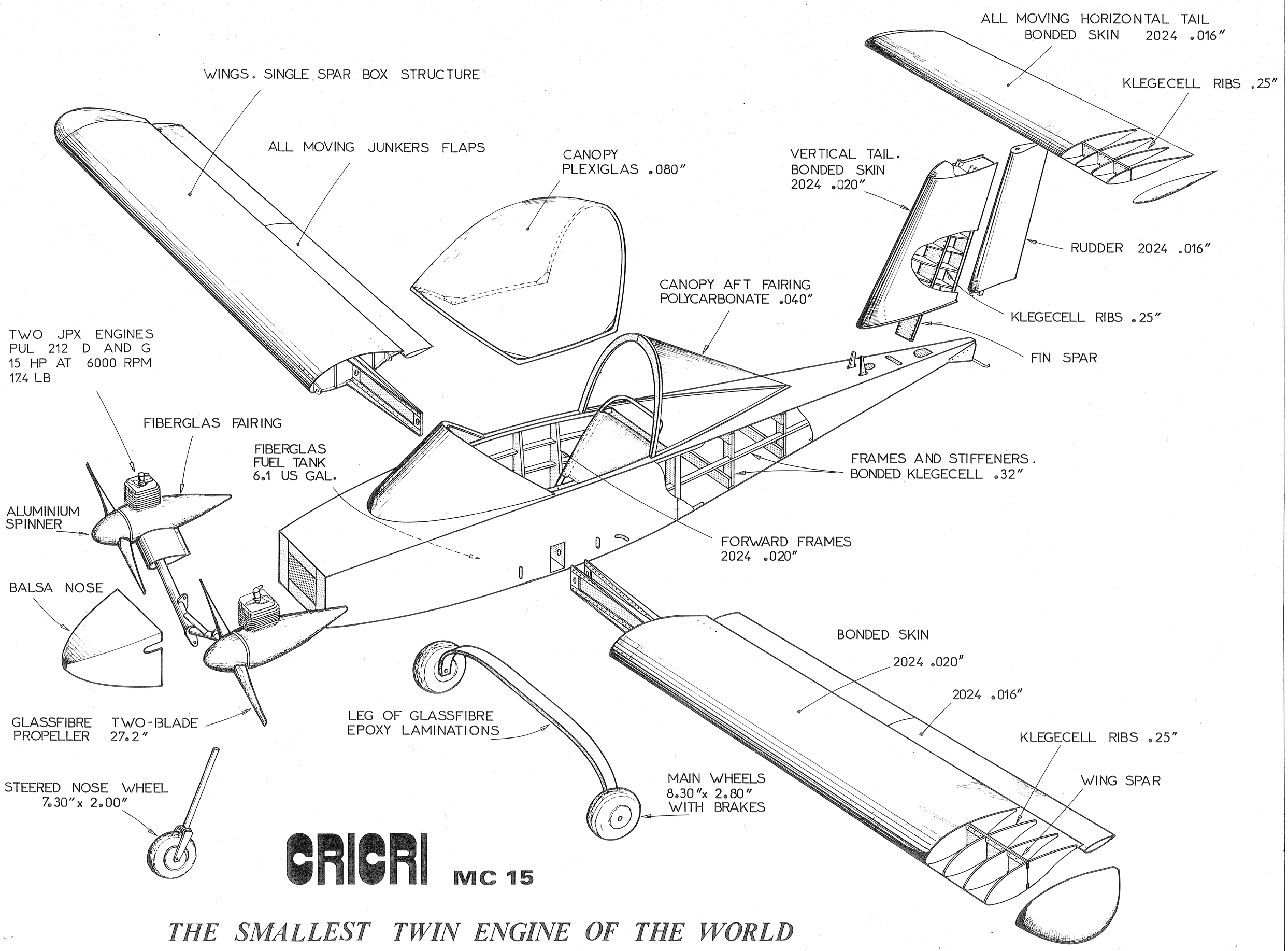
ALL MOVING HORIZONTAL TAIL
BONDED SKIN 2024 .016"
KLEGECELL RIBS .25"
WINGS. SINGLE SPAR BOX STRUCTURE
ALL MOVING JUNKERS FLAPS
CANOPY
PLEXIGLAS .080"
VERTICAL TAIL.
BONDED SKIN
2024 .020"
RUDDER 2024 .016"
CANOPY AFT FAIRING
POLYCARBONATE .040"
KLEGECELL RIBS .25"
FIN SPAR
TWO JPX ENGINES
PUL 212 D AND G
15 HP AT 6000 RPM
17.4 LB
FIBERGLAS FAIRING
FIBERGLAS
FUEL TANK
6.1 US GAL.
FRAMES AND STIFFENERS.
BONDED KLEGECELL .32"
ALUMINIUM
SPINNER
FORWARD FRAMES
2024 .020"
BALSA NOSE
BONDED SKIN
2024 .020"
2024 .016"
GLASSFIBRE TWO-BLADE
PROPELLER 27.2"
LEG OF GLASSFIBRE
EPOXY LAMINATIONS
KLEGECELL RIBS .25"
WING SPAR
STEERED NOSE WHEEL
7.30" x 2.00"
MAIN WHEELS
8.30" x 2.80"
WITH BRAKES
CRICRI MC 15
THE SMALLEST TWIN ENGINE OF THE WORLD

| PLAN LIST FOR THE MC15 | | DRAWING GROUPS |
|---|---|---|
| NUMBER | DESCRIPTION | DESCRIPTION |
| MC15-CVR | Cover Sheet | 000 Misc |
| MC15-000 | General Arrangement-Three Views | 100 Wings |
| MC15-100 | Wing Assembly-Spar Webs and Caps | 200 Fuselage |
| MC15-101/104 | (101)RH Wing Spar Inbd Portion/(104) LH Wing Spar Inbd Portion | 300 Tail Components |
| MC15-102/103 | (102)RH&LH Wing Spars-Root Ends/(103)RH Wing Spar-Outbd Portion | 400 Main Gear |
| MC15-105/106 | (105)RH Wing Mounting/(106)Ribs and Attachment Fittings-Details | 500 Power Plant |
| MC15-107/108 | (107)Flaps-Assembly and Details/(108)Flap Brackets-Wing Tip Fairings | 600 Controls |
| MC15-109 | Riveting Plan-Spar and RH Wing Assembly | 700 Instrument Panel |
| MC15-200 | Fuselage-General | 800 Nose/Cockpit Items |
| MC15-201 | Fuselage Skins Dimensions | |
| MC15-202 | Frame 4-Details | |
| MC15-203 | Frame 4-Rear Face | |
| MC15-204 | Frame 4-Front Face | |
| MC15-205 | Fuselage-Aft Portion-Riveting-Stringers | |
| MC15-206 | Stiffeners-Aft Portion of Fuselage | |
| MC15-207 | Frames 11,12 and 13-Details | |
| MC15-208 | Fuselage-Aft Portion-Assembly | |
| MC15-209 | Fuselage-Forward Portion Riveting-Stringers | |
| MC15-210 | Fuselage-Forward Portion-Assembly | |
| MC15-211 | Frames 1 and 1B | |
| MC15-212 | Frame 7 | |
| MC15-213 | Frame 6-Longitudinal Beam F4-F6 | |
| MC15-214 | Frame 3 | |
| MC15-215 | Frame 5 | |
| MC15-216 | Frame 2-Forward Stiffeners | |
| MC15-217 | Canopy Framing | |
| MC15-218 | Canopy | |
| MC15-300/301 | (300)Fin-General/(301)Fin Spar | |
| MC15-302 | Vertical Tail-Details | |
| MC15-303/304 | (303)Fin-Upper Portion/(304)Fin-Lower Portion | |
| MC15-305/306 | (305)Fin to Fuselage Attachment/(306)Rudder | |
| MC15-307 | Horizontal Tail-Assembly and Details | |
| MC15-400 | Main Gear | |
| MC15-401 | Nose Gear-Brakes-Wheel Fairing | |
| MC15-500 | Power Plant Group-Assembly | |
| MC15-501 | Power Plant Group-Details | |
| MC15-600 | Elevator Control System-Assembly-Details | |
| MC15-601 | Elevator and Aileron Control-Details | |
| MC15-602 | Flap and Aileron Control System | |
| MC15-603 | Rudder controls | |
| MC15-700 | Instrument Panel-Airspeed-Seat | |
| MC15-800 | Nose-Ventilation-Fuel Tank-Engine Controls | |
| MC15-TRLR | Vehicle Trailer | |

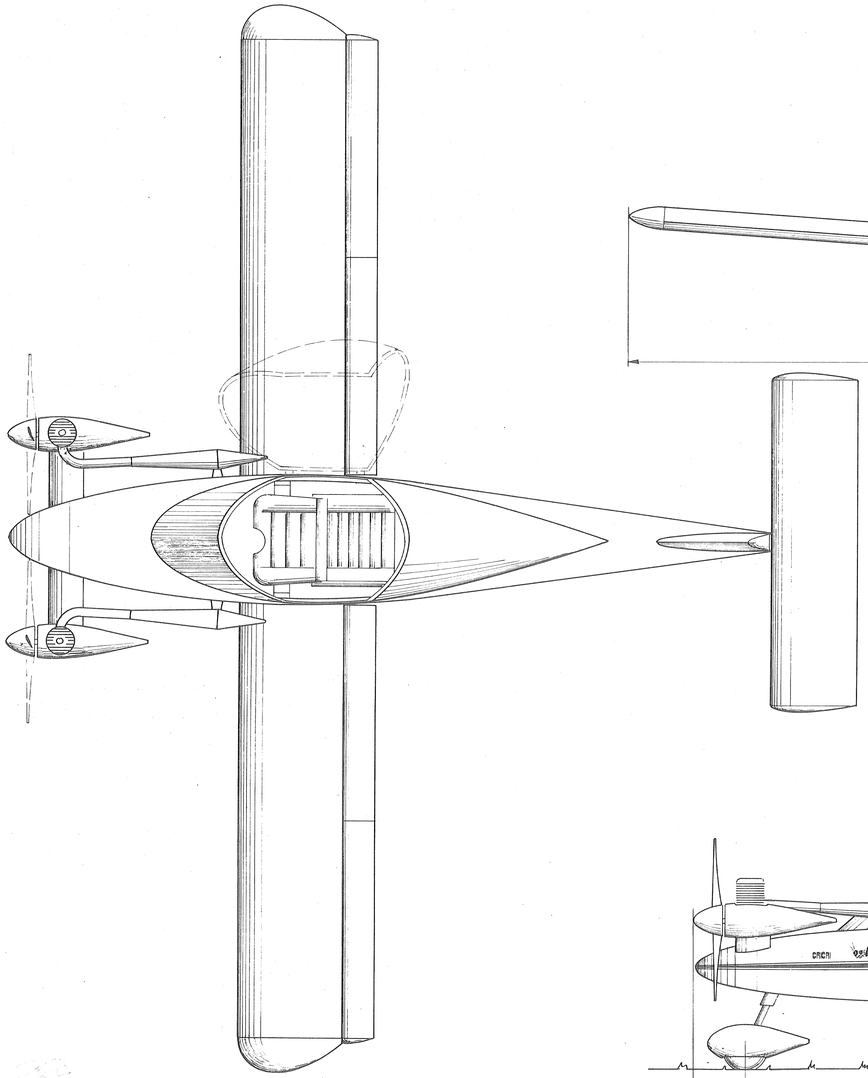

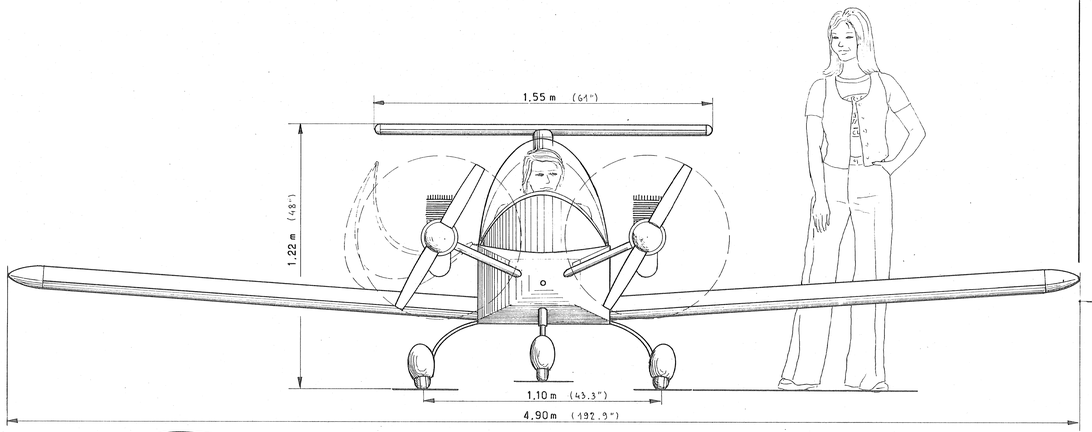


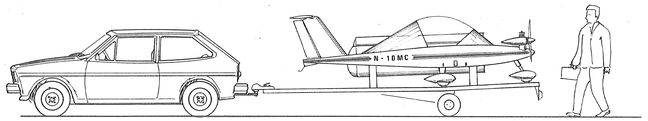


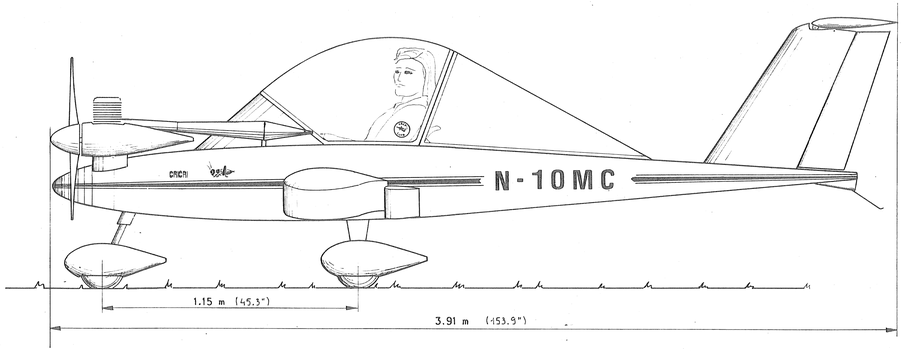


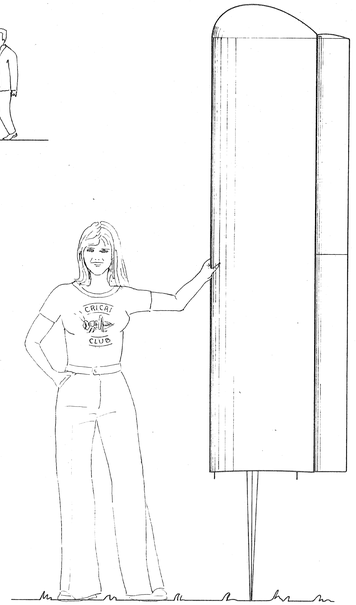


## DIMENSIONS

| | |
|---|---|
| WING SPAN | 16 FT 0.75 IN |
| WING AREA | 33.4 SQ FT |
| WING ASPECT RATIO | 7.74 |
| LENGTH OVERALL | 12 FT 10 IN |
| HEIGHT OVERALL | 4 FT |

## WEIGHTS

| | |
|---|---|
| WEIGHT EMPTY | 172 LB |
| MAX TAKE OFF WEIGHT | 375 LB |
| WING LOADING | 11.2 LB/SQ FT |

ASSEMBLY OR DISASSEMBLY TIME 2 MINUTES

## PERFORMANCE

| | |
|---|---|
| MAX LEVEL SPEED | 135 MPH |
| STALL. SPEED FLAPS DOWN | 45 MPH |
| TAKE OFF RUN | 400 FT |
| MAX RATE OF CLIMB AT S/L | 1,200 FT/MN |
| SERVICE CEILING | 16,000 FT |
| RANGE WITH MAX FUEL | 250 MILES |
| FUEL CONSUMPTION | 47 M/US GAL. |

## LOAD FACTORS

| | |
|---|---|
| ULTIMATE LOAD FACTOR | +9 -4.5 |
| LIMIT LOAD FACTOR FOR UTILISATION | +4.5 - 2.3 |

## PLANS LIST

| | |
|---|---|
| 800 | ENGINES CONTROL - FUEL SYSTEM - AIRING - NOSE |
| 700 | INSTRUMENTS PANEL - PITOT SYSTEME - SEAT |
| 603 | DIRECTION CONTROL SYSTEME |
| 602 | FLAP AND AILERON CONTROL SYSTEM |
| 601 | ELEVATOR AND AILERON CONTROL - |
| 600 | ELEVATOR CONTROL SYSTEME |
| 504 | POWER PLANT - DETAILS |
| 500 | POWER PLANT - ASSEMBLY |
| 404 | NOSE GEAR - BRAKES - WHEEL FAIRING |
| 400 | PRINCIPAL LANDING GEAR |
| 307 | HORIZONTAL TAIL |
| 306 | RUDDER |
| 305 | FIN TO FUSELAGE ATTACHMENT |
| 304 | FIN - LOWER PORTION |
| 303 | FIN - UPPER PORTION |
| 302 | VERTICAL TAIL - DETAILS |
| 301 | FIN SPAR |
| 300 | FIN - GENERAL |
| 220 | |
| 219 | |
| 218 | CANOPY |
| 217 | CANOPY FRAMING |
| 216 | FRAME 2 - FORWARD STIFFENERS |
| 215 | FRAME 5 |
| 214 | FRAME 3 |
| 213 | FRAME 6 - LONGITUDINAL BEAM F4 - F6 |
| 212 | FRAME 7 |
| 211 | FRAME 1 AND 1 BIS |
| 210 | FUSELAGE - FORWARD PORTION - ASSEMBLY |
| 209 | FUSELAGE - FORWARD PORTION - RIVETING - STRINGERS |
| 208 | FUSELAGE - AFT PORTION - ASSEMBLY |
| 207 | FRAMES 11 - 12 - 13 - DETAILS |
| 206 | STIFFENERS - AFT PORTION OF FUSELAGE |
| 205 | FUSELAGE - AFT PORTION - RIVETING - STRINGERS |
| 204 | FRAME 4 - FRONT FACE |
| 203 | FRAME 4 - REAR FACE |
| 202 | FRAME 4 - DETAILS |
| 201 | FUSELAGE SKINS - DIMENSIONS |
| 200 | FUSELAGE - GENERAL |
| 411 | |
| 410 | |
| 409 | WING ASSEMBLY - RIVETING PLAN - SPAR AND RIGHT HAND |
| 408 | FLAP BRACKETS - WING TIP FAIRING |
| 407 | FLAPS - ASSEMBLY AND DETAILS |
| 406 | RIBS AND ATTACHMENT FITTINGS - DETAILS |
| 405 | RIGHT HAND WING MOUNTING |
| 404 | LEFT HAND WING SPAR - INBOARD PORTION |
| 403 | RIGHT HAND WING SPAR - OUBOARD PORTION |
| 402 | RIGHT AND LEFT HAND WING SPARS - ROOT ENDS |
| 401 | RIGHT HAND WING SPAR - INBOARD PORTION |
| 400 | WING ASSEMBLY - SPAR WEBS AND CAP |
| 000 | GENERAL ARRANGEMENT - THREE VIEWS |

AVIONS COLOMBAN

CRICRI MC 15

TITLE : GENERAL ARRANGEMENT - THREE VIEWS

Scale : 1/40

Drawn by : Colomban

Date : May 1981

Copyright © 1976 Michel COLOMBAN

This sheet is one of a set for the CRICRI MC 15 aeroplane intended for use by an amateur builder holding a valid licence for construction of a single example of this aircraft. Any other use of this plan, in whole or in part, will be deemed fraudulent

000

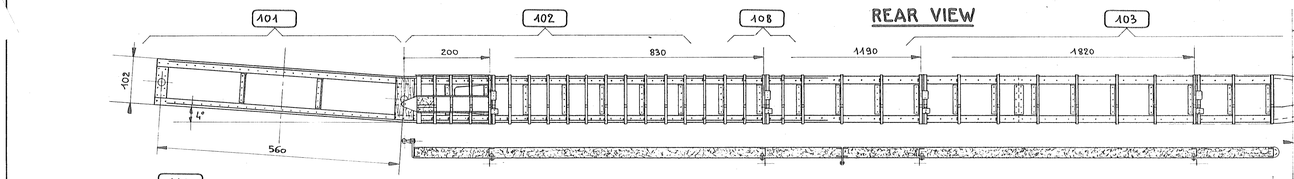


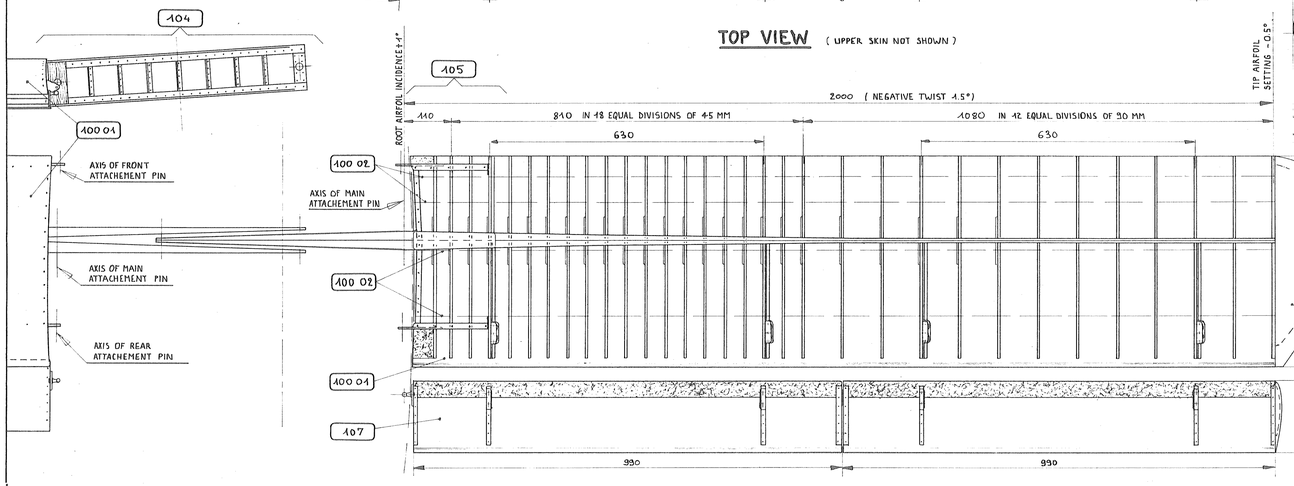


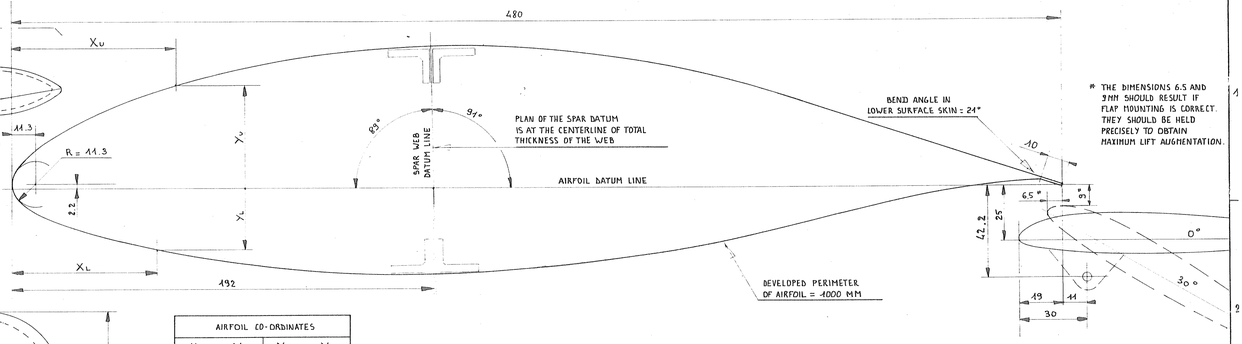


* THE DIMENSIONS 6.5 AND 3 MM SHOULD RESULT IF FLAP MOUNTING IS CORRECT. THEY SHOULD BE HELD PRECISELY TO OBTAIN MAXIMUM LIFT AUGMENTATION.

| AIRFOIL CO-ORDINATES | | | |
|---|---|---|---|
| Xu | Yu | XL | YL |
| 1.00 | 6.74 | 3.20 | - 6.09 |
| 2.01 | 8.47 | 5.19 | - 7.38 |
| 4.45 | 11.52 | 7.85 | - 9.38 |
| 9.80 | 17.09 | 14.20 | - 12.92 |
| 21.49 | 25.20 | 26.51 | - 17.75 |
| 33.36 | 31.56 | 38.64 | - 21.39 |
| 45.33 | 36.85 | 50.67 | - 24.44 |
| 69.42 | 45.58 | 74.58 | - 29.43 |
| 93.65 | 52.42 | 98.35 | - 33.31 |
| 117.96 | 57.68 | 122.04 | - 36.20 |
| 142.33 | 61.54 | 145.67 | - 38.24 |
| 166.73 | 64.04 | 169.27 | - 39.31 |
| 191.16 | 65.12 | 192.84 | - 39.44 |
| 215.59 | 64.88 | 216.41 | - 38.60 |
| 240.00 | 63.37 | 240.00 | - 36.89 |
| 264.38 | 60.76 | 263.62 | - 34.48 |
| 288.71 | 57.14 | 287.29 | - 31.43 |
| 312.98 | 52.51 | 311.02 | - 27.78 |
| 337.17 | 46.63 | 334.83 | - 23.30 |
| 361.24 | 39.24 | 358.76 | - 17.76 |
| | | 382.84 | - 11.49 |
| | | 407.03 | - 6.04 |
| | | 431.34 | - 1.66 |
| | | 470.00 | 2.73 |
| 480.00 | 0.50 | 480.00 | - 0.50 |

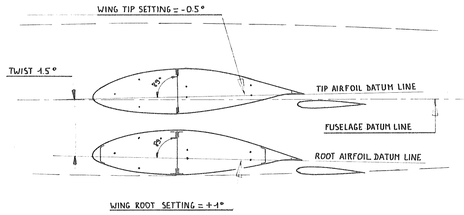


WING SETTING IS THE ANGLE FORMED BY THE AIRFOIL AND FUSELAGE DATUM LINES. IT IS POSITIVE WHEN THE LEADING EDGE IS ABOVE THE FUSELAGE REFERENCE.

THE RIBS, ALL IDENTICAL, ARE BONDED TO THE UNTWISTED SPAR. THE 1.5° NEGATIVE TWIST IS PRODUCED WHEN THE SKIN IS BONDED ON, BY THE BONDING FIXTURE, ITSELF TWISTED 1.5°.

THE ANGLE OF 1.5° CORRESPONDS TO A SLOPE OF 2.6/1000

RIB TEMPLATES : BUTT-JOIN TWO SHEETS OF ALUMINIUM AT THE SPAR WEB DATUM LINE. LAY OUT THE PROFILE, CUT OUT AND FINISH AS TOUGH MAKING A SINGLE TEMPLATE. SEPARATE THE FRONT AND REAR SECTIONS AFTERWARD.

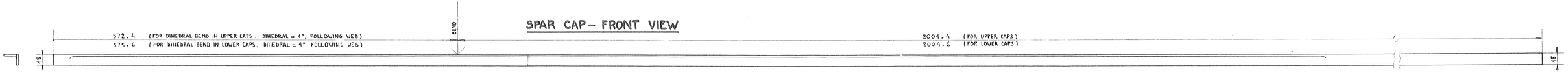


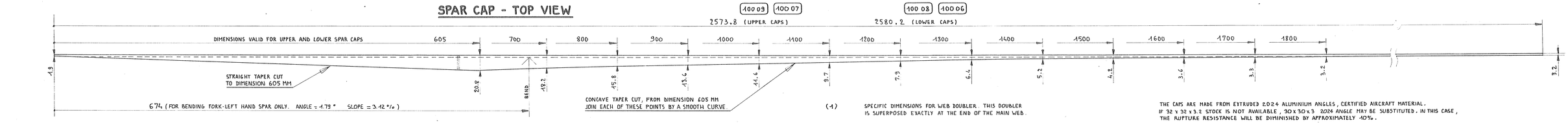


(1) SPECIFIC DIMENSIONS FOR WEB DOUBLER. THIS DOUBLER IS SUPERPOSED EXACTLY AT THE END OF THE MAIN WEB.

(2) THESE DIMENSIONS ARE TO BE INCREASED BY 0.3 MM FOR THE FORKED LEFT HAND SPAR.

THE CAPS ARE MADE FROM EXTRUDED 2024 ALUMINIUM ANGLES, CERTIFIED AIRCRAFT MATERIAL. IF 32 x 32 x 3.2 STOCK IS NOT AVAILABLE, 30 x 30 x 3 2024 ANGLE MAY BE SUBSTITUTED. IN THIS CASE, THE RUPTURE RESISTANCE WILL BE DIMINISHED BY APPROXIMATELY 10%.

ASSEMBLY OF WEB AND CAPS WITH 2.117-T4 ALLOY RIVETS IS SHOWN ON DRAWING 109. ALIGN THE INBOARD ENDS (TO THE LEFT ON THIS DRAWING) OF THE WEBS AND CAPS.

EQUIVALENT THICKNESS :

- 0.5 MM ≅ 0.020"
- 0.8 MM ≅ 0.032"
- 3.2 MM ≅ 0.125"

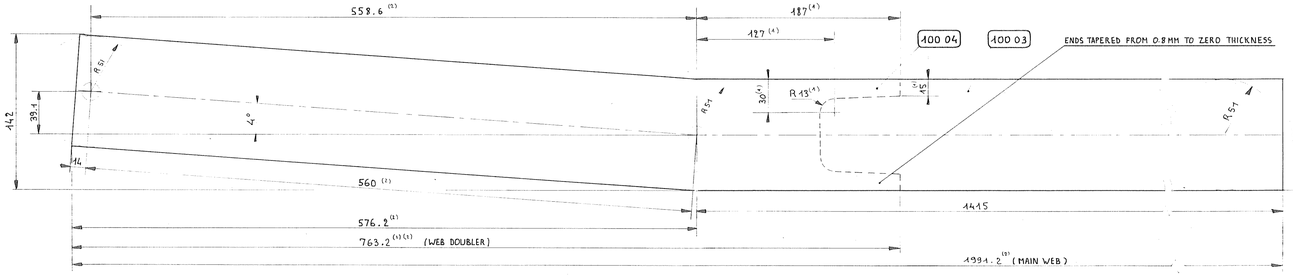


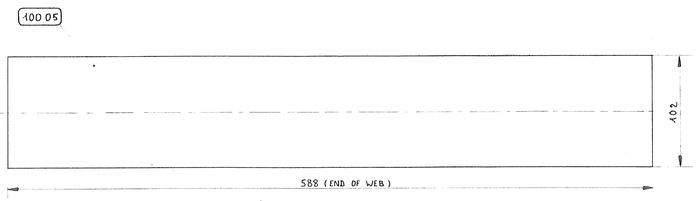


BONDING :
- THE ENTIRE SURFACE OF THE WEB DOUBLER TO THE WEB, FOR THE RIGHT HAND SPAR
- THE SURFACES IN COMMON, FOR THE FORKED LEFT HAND SPAR

| Reference | Qty. | Description | Material | Cond. | Dimensions | Resist. | Comments |
|---|---|---|---|---|---|---|---|
| 100 09 | 2 | UPPER CAP - LEFT | 2024 | T4 | 2574 x 15 x 3/8 x 3.2 | 63,000 | EXTRUSION |
| 100 08 | 2 | LOWER CAP - LEFT | 2024 | T4 | 2584 x 15 x 3/8 x 3.2 | 63,000 | EXTRUSION |
| 100 07 | 2 | UPPER CAP - RIGHT | 2024 | T4 | 2574 x 15 x 3/8 x 3.2 | 63,000 | EXTRUSION |
| 100 06 | 2 | LOWER CAP - RIGHT | 2024 | T4 | 2584 x 15 x 3/8 x 3.2 | 63,000 | EXTRUSION |
| 100 05 | 2 | WEB END | 2024 | T3 | 588 x 102 x 0.5 | 63,000 | t = 0.5 MM |
| 100 04 | 2 | WEB DOUBLER | 2024 | T3 | 764 x 145 x 0.8 | 63,000 | t = 0.8 MM |
| 100 03 | 2 | MAIN WEB | 2024 | T3 | 1992 x 142 x 0.8 | 63,000 | t = 0.8 MM |
| 100 02 | 44 | SPACERS | BALSA | | 2000 x 3 x 30 | | FOR ASSEMBLY |
| 100 01 | 2 | SKIN | 2024 | T3 | 2000 x 1000 x 0.5 | 63,000 | t = 0.5 MM |

CRICRI MC 15

TITLE : WING ASSEMBLY _ SPAR WEBS AND CAPS

Scale : 1/5 1/1 1/2

Drawn by : Colomban

Date : May 1981

Copyright © 1976 Michel COLOMBAN

This sheet is one of a set for the CRICRI MC 15 airplane intended for use by an amateur builder holding a valid license for construction of a single example of this aircraft. Any other use of this plan, in whole or in part, will be deemed fraudulent

100

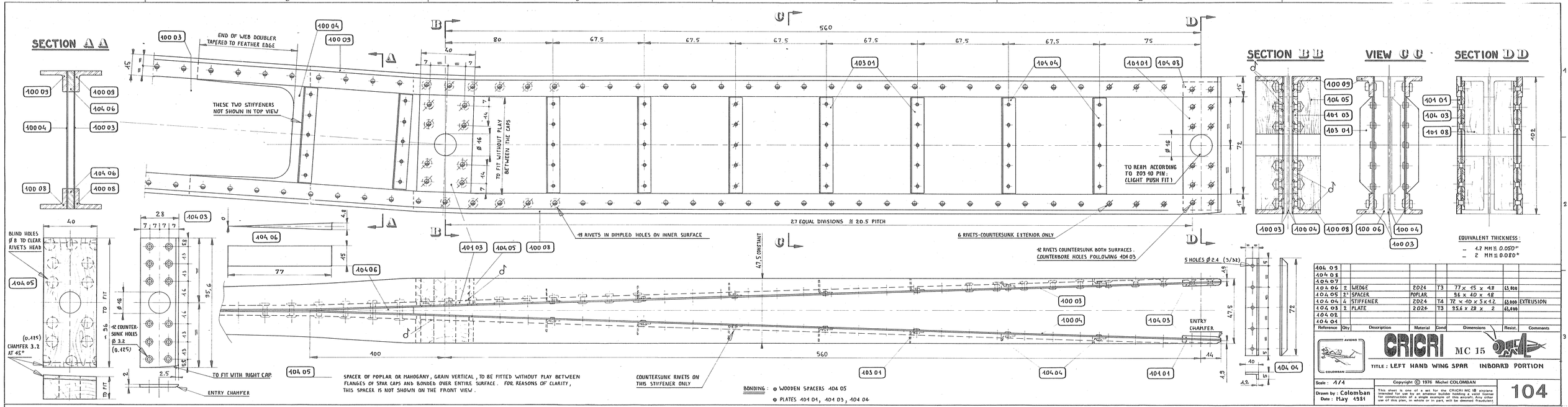


| Reference | Qty | Description | Material | Cond | Dimensions | Resist. | Comments |
|---|---|---|---|---|---|---|---|
| 104 09 | | | | | | | |
| 104 08 | | | | | | | |
| 104 07 | | | | | | | |
| 104 06 | 2 | WEDGE | 2024 | T3 | 77 x 45 x 4.8 | 63.000 | |
| 104 05 | 2* | SPACER | POPLAR | | 96 x 40 x 48 | | |
| 104 04 | 4 | STIFFENER | 2024 | T4 | 72 x 40 x 5 x 1.2 | 63.000 | EXTRUSION |
| 104 03 | 2 | PLATE | 2024 | T3 | 95.6 x 28 x 2 | 63.000 | |
| 104 02 | | | | | | | |
| 104 01 | | | | | | | |

AVIONS COLOMBAN — CRICRI MC 15

TITLE : LEFT HAND WING SPAR INBOARD PORTION

Scale : 1/1

Drawn by : Colomban
Date : May 1981

Copyright © 1976 Michel COLOMBAN
This sheet is one of a set for the CRICRI MC 15 airplane intended for use by an amateur builder holding a valid license for construction of a single example of this aircraft. Any other use of this plan, in whole or in part, will be deemed fraudulent.

104

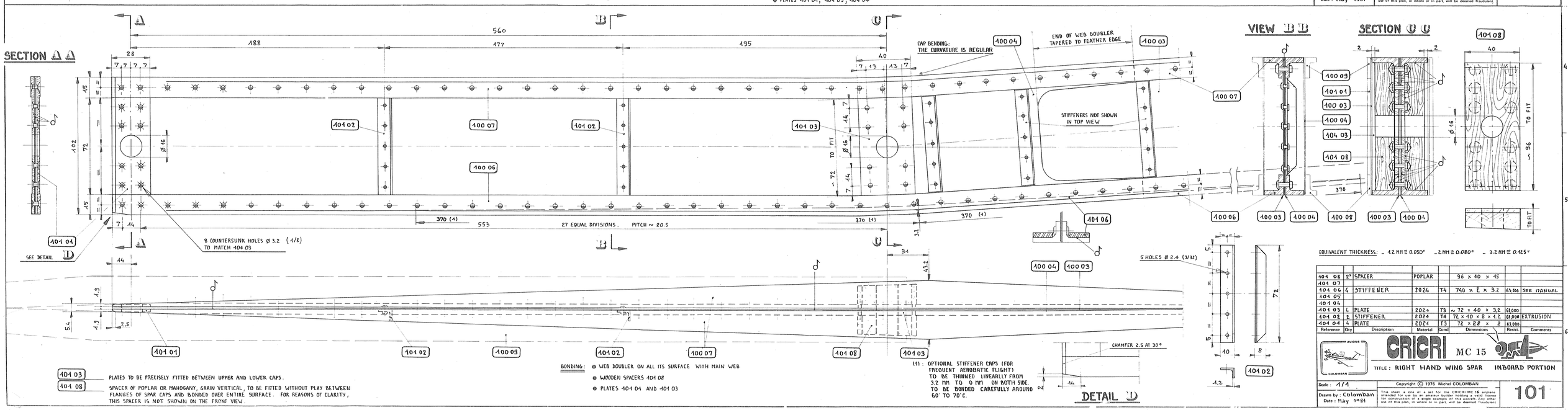


104 03 — PLATES TO BE PRECISELY FITTED BETWEEN UPPER AND LOWER CAPS.

104 08 — SPACER OF POPLAR OR MAHOGANY, GRAIN VERTICAL, TO BE FITTED WITHOUT PLAY BETWEEN FLANGES OF SPAR CAPS AND BONDED OVER ENTIRE SURFACE. FOR REASONS OF CLARITY, THIS SPACER IS NOT SHOWN ON THE FRONT VIEW.

| Reference | Qty | Description | Material | Cond | Dimensions | Resist. | Comments |
|---|---|---|---|---|---|---|---|
| 104 09 | | | | | | | |
| 104 08 | 2* | SPACER | POPLAR | | 96 x 40 x 15 | | |
| 104 07 | | | | | | | |
| 104 06 | 4 | STIFFENER | 2024 | T4 | 740 x L x 3.2 | 63.000 | SEE MANUAL |
| 104 05 | | | | | | | |
| 104 04 | | | | | | | |
| 104 03 | 4 | PLATE | 2024 | T3 | ~ 72 x 40 x 3.2 | 63.000 | |
| 104 02 | 2 | STIFFENER | 2024 | T4 | 72 x 40 x 8 x 1.2 | 63.000 | EXTRUSION |
| 104 01 | 4 | PLATE | 2024 | T3 | 72 x 28 x 2 | 63.000 | |

AVIONS COLOMBAN — CRICRI MC 15

TITLE : RIGHT HAND WING SPAR INBOARD PORTION

Scale : 1/1

Drawn by : Colomban
Date : May 1981

Copyright © 1976 Michel COLOMBAN
This sheet is one of a set for the CRICRI MC 15 airplane intended for use by an amateur builder holding a valid license for construction of a single example of this aircraft. Any other use of this plan, in whole or in part, will be deemed fraudulent.

101

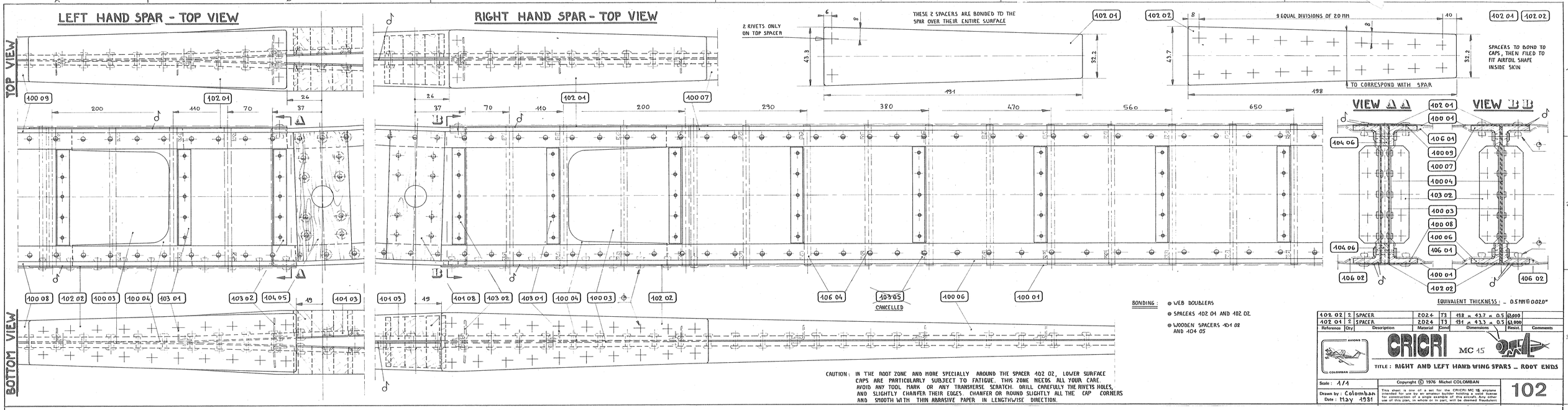


| Reference | Qty | Description | Material | Cond | Dimensions | Resist. | Comments |
|---|---|---|---|---|---|---|---|
| 102 02 | 2 | SPACER | 2024 | T3 | 198 x 43.7 x 0.5 | 63.000 | |
| 102 01 | 2 | SPACER | 2024 | T3 | 191 x 43.3 x 0.5 | 63.000 | |

CRICRI MC 15

TITLE: RIGHT AND LEFT HAND WING SPARS _ ROOT ENDS

Scale: 1/1

Drawn by: Colomban

Date: May 1981

Copyright © 1976 Michel COLOMBAN

This sheet is one of a set for the CRICRI MC 15 airplane intended for use by an amateur builder holding a valid license for construction of a single example of this aircraft. Any other use of this plan, in whole or in part, will be deemed Fraudulent

102

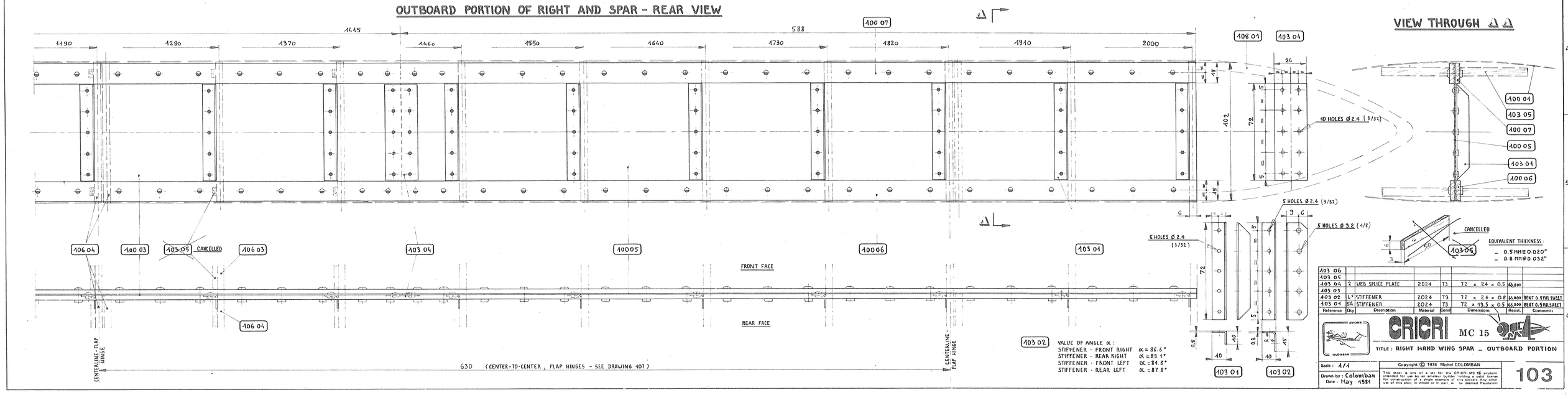


| Reference | Qty | Description | Material | Cond | Dimensions | Resist. | Comments |
|---|---|---|---|---|---|---|---|
| 103 06 | | | | | | | |
| 103 05 | | | | | | | |
| 103 04 | 2 | WEB SPLICE PLATE | 2024 | T3 | 72 x 24 x 0.5 | 63.000 | |
| 103 03 | | | | | | | |
| 103 02 | 4 | STIFFENER | 2024 | T3 | 72 x 2.4 x 0.8 | 63.000 | BENT 0.8 MM SHEET |
| 103 01 | 54 | STIFFENER | 2024 | T3 | 72 x 19.5 x 0.5 | 63.000 | BENT 0.5 MM SHEET |

CRICRI MC 15

TITLE: RIGHT HAND WING SPAR _ OUTBOARD PORTION

Scale: 1/1

Drawn by: Colomban

Date: May 1981

Copyright © 1976 Michel COLOMBAN

This sheet is one of a set for the CRICRI MC 15 airplane intended for use by an amateur builder holding a valid license for construction of a single example of this aircraft. Any other use of this plan, in whole or in part, will be deemed Fraudulent

103

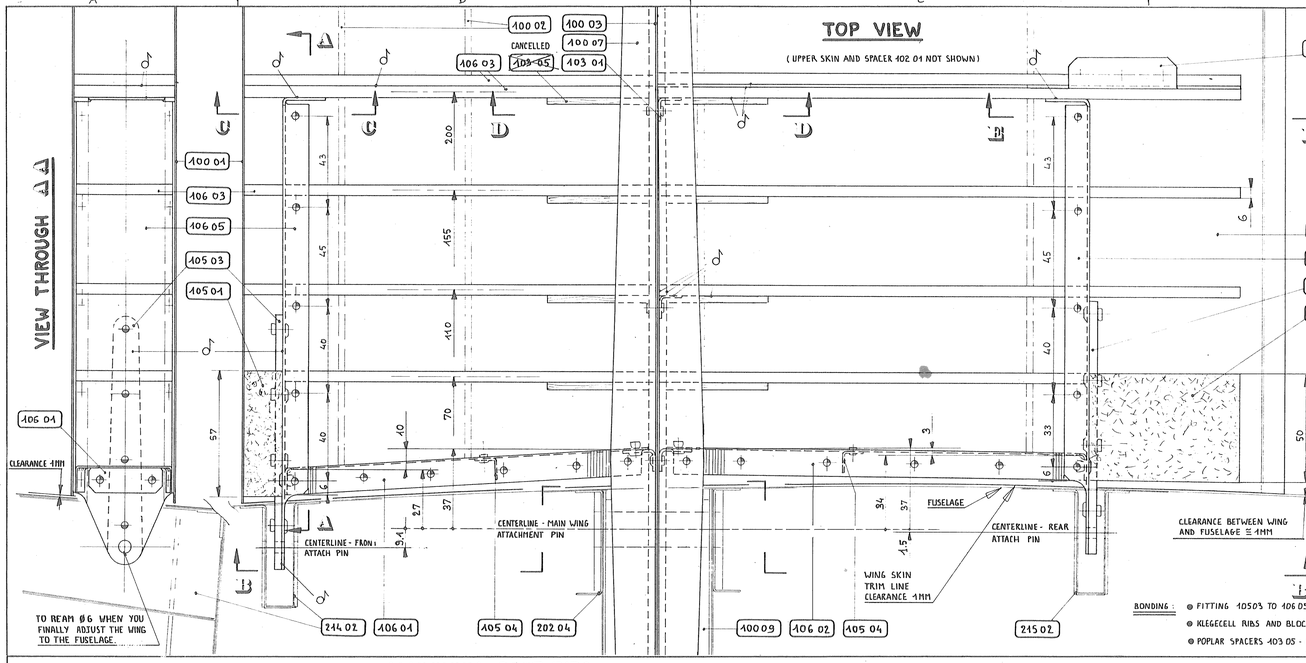


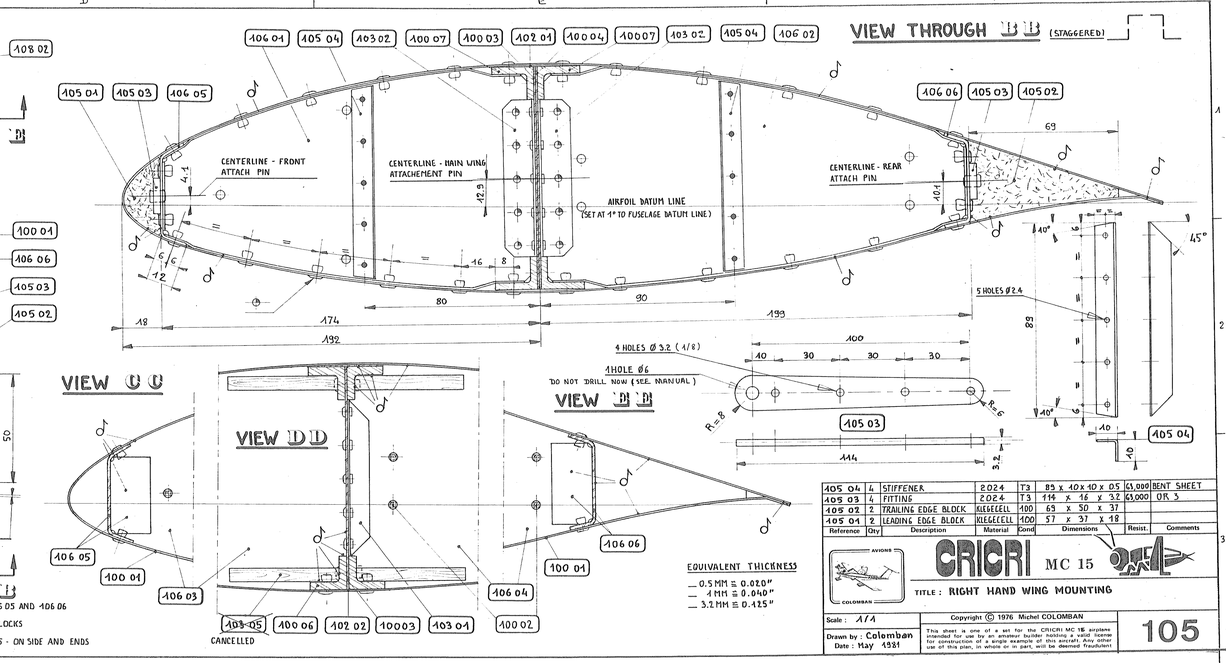


BONDING :
- FITTING 105 03 TO 106 05 AND 106 06
- KLEGECELL RIBS AND BLOCKS
- POPLAR SPACERS 103 05 - ON SIDE AND ENDS

EQUIVALENT THICKNESS
- 0.5 MM ≅ 0.020"
- 1 MM ≅ 0.040"
- 3.2 MM ≅ 0.125"

| Reference | Qty | Description | Material | Cond | Dimensions | Resist. | Comments |
|---|---|---|---|---|---|---|---|
| 105 04 | 4 | STIFFENER | 2024 | T3 | 85 x 40 x 40 x 0.5 | 63,000 | BENT SHEET |
| 105 03 | 4 | FITTING | 2024 | T3 | 114 x 16 x 3.2 | 63,000 | OR 3 |
| 105 02 | 2 | TRAILING EDGE BLOCK | KLEGECELL | 100 | 69 x 50 x 37 | | |
| 105 01 | 2 | LEADING EDGE BLOCK | KLEGECELL | 100 | 57 x 37 x 18 | | |

CRICRI MC 15

TITLE : RIGHT HAND WING MOUNTING

Scale : 1/1

Drawn by : Colomban
Date : May 1981

Copyright © 1976 Michel COLOMBAN
This sheet is one of a set for the CRICRI MC 15 airplane intended for use by an amateur builder holding a valid license for construction of a single example of this aircraft. Any other use of this plan, in whole or in part, will be deemed fraudulent.

105

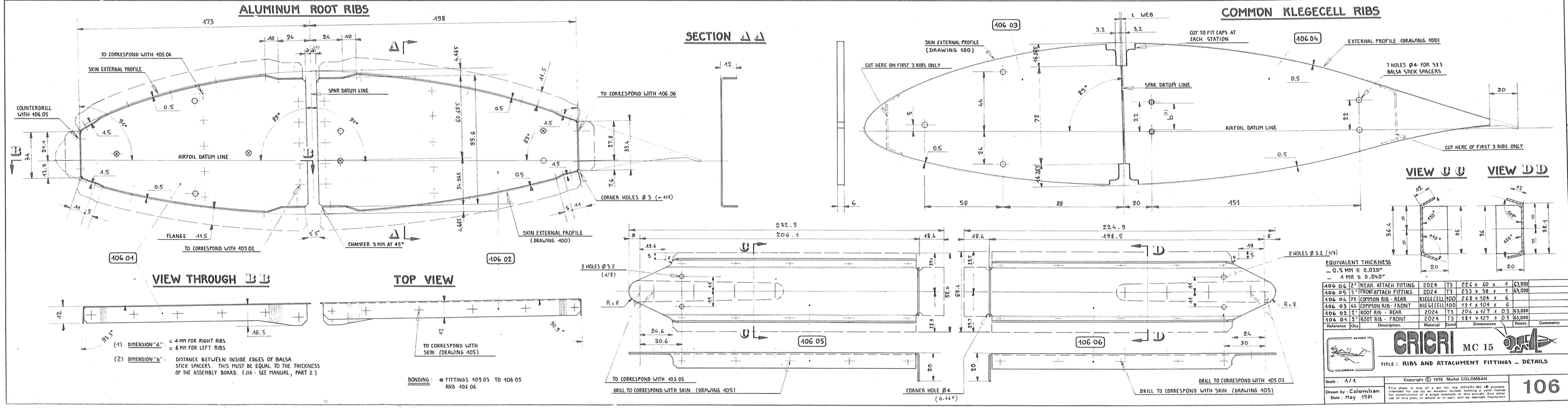


(1) DIMENSION "A" : = 4 MM FOR RIGHT RIBS
= 6 MM FOR LEFT RIBS

(2) DIMENSION "b" : DISTANCE BETWEEN INSIDE EDGES OF BALSA STICK SPACERS. THIS MUST BE EQUAL TO THE THICKNESS OF THE ASSEMBLY BOARD. (J16 : SEE MANUAL, PART 2)

BONDING : ● FITTINGS 105 03 TO 106 05 AND 106 06

EQUIVALENT THICKNESS
- 0.5 MM ≅ 0.020"
- 1 MM ≅ 0.040"

| Reference | Qty | Description | Material | Cond | Dimensions | Resist. | Comments |
|---|---|---|---|---|---|---|---|
| 106 06 | 2* | REAR ATTACH FITTING | 2024 | T3 | 226 x 60 x 1 | 63,000 | |
| 106 05 | 2* | FRONT ATTACH FITTING | 2024 | T3 | 233 x 58 x 1 | 63,000 | |
| 106 04 | 7* | COMMON RIB - REAR | KLEGECELL | 100 | 268 x 104 x 6 | | |
| 106 03 | 66 | COMMON RIB - FRONT | KLEGECELL | 100 | 191 x 104 x 6 | | |
| 106 02 | 2* | ROOT RIB - REAR | 2024 | T3 | 206 x 127 x 0.5 | 63,000 | |
| 106 01 | 2* | ROOT RIB - FRONT | 2024 | T3 | 181 x 127 x 0.5 | 63,000 | |

CRICRI MC 15

TITLE : RIBS AND ATTACHMENT FITTINGS - DETAILS

Scale : 1/1

Drawn by : Colomban
Date : May 1981

Copyright © 1976 Michel COLOMBAN
This sheet is one of a set for the CRICRI MC 15 airplane intended for use by an amateur builder holding a valid license for construction of a single example of this aircraft. Any other use of this plan, in whole or in part, will be deemed fraudulent.

106

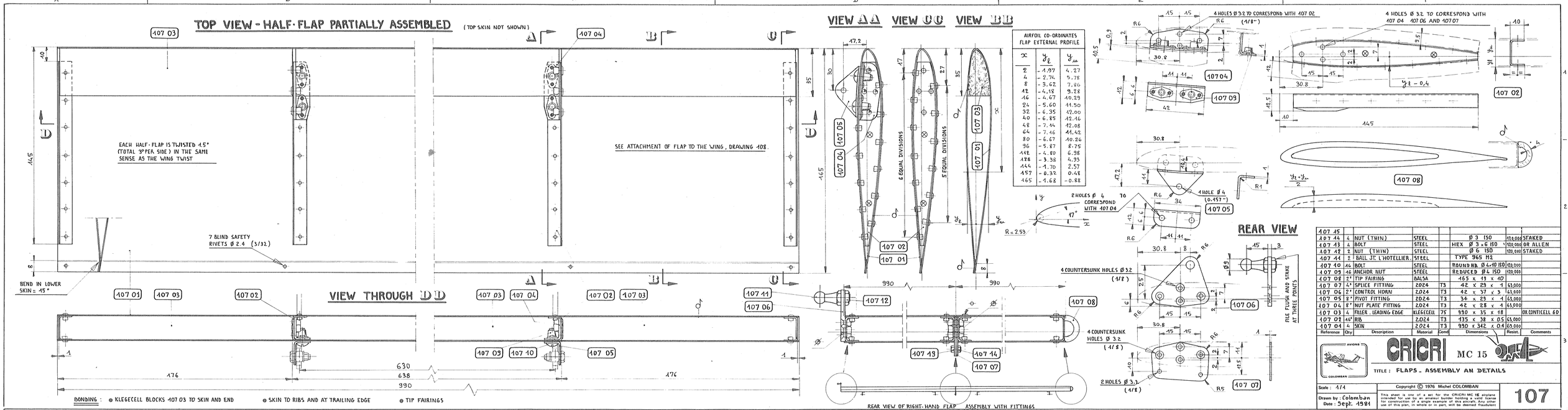


AIRFOIL CO-ORDINATES
FLAP EXTERNAL PROFILE

| x | $y_l$ | $y_u$ |
|---|---|---|
| 2 | -1.97 | 4.27 |
| 4 | -2.74 | 5.78 |
| 8 | -3.62 | 7.86 |
| 12 | -4.18 | 9.28 |
| 16 | -4.67 | 10.29 |
| 24 | -5.60 | 11.50 |
| 32 | -6.35 | 12.00 |
| 40 | -6.85 | 12.16 |
| 48 | -7.14 | 12.08 |
| 64 | -7.16 | 11.42 |
| 80 | -6.67 | 10.26 |
| 96 | -5.87 | 8.75 |
| 112 | -4.80 | 6.98 |
| 128 | -3.38 | 4.93 |
| 144 | -1.70 | 2.57 |
| 157 | -0.32 | 0.48 |
| 165 | -1.68 | -0.82 |

| Reference | Qty | Description | Material | Cond | Dimensions | Resist. | Comments |
|---|---|---|---|---|---|---|---|
| 107 15 | | | | | | | |
| 107 14 | 4 | NUT (THIN) | STEEL | | Ø 3 ISO | 120.000 | STAKED |
| 107 13 | 4 | BOLT | STEEL | | HEX Ø 3 x 6 ISO | 120.000 | OR ALLEN |
| 107 12 | 2 | NUT (THIN) | STEEL | | Ø 6 ISO | 120.000 | STAKED |
| 107 11 | 2 | BALL JT L'HOTELLIER | STEEL | | TYPE 965 M2 | | |
| 107 10 | 16 | BOLT | STEEL | | ROUND HD Ø 4 x 10 ISO | 120.000 | |
| 107 09 | 16 | ANCHOR NUT | STEEL | | REDUCED Ø 4 ISO | 120.000 | |
| 107 08 | 2* | TIP FAIRING | BALSA | | 165 x 19 x 40 | | |
| 107 07 | 4* | SPLICE FITTING | 2024 | T3 | 42 x 29 x 1 | 63.000 | |
| 107 06 | 2* | CONTROL HORN | 2024 | T3 | 42 x 37 x 3 | 63.000 | |
| 107 05 | 8* | PIVOT FITTING | 2024 | T3 | 34 x 29 x 1 | 63.000 | |
| 107 04 | 8* | NUT PLATE FITTING | 2024 | T3 | 42 x 28 x 1 | 63.000 | |
| 107 03 | 4 | FILLER, LEADING EDGE | KLEGECELL | 75 | 990 x 35 x 18 | | OR CONTICELL 60 |
| 107 02 | 16* | RIB | 2024 | T3 | 135 x 38 x 0.5 | 63.000 | |
| 107 01 | 4 | SKIN | 2024 | T3 | 990 x 342 x 0.4 | 63.000 | |

CRICRI MC 15

TITLE: FLAPS - ASSEMBLY AN DETAILS

Scale: 1/1

Drawn by: Colomban
Date: Sept. 1981

Copyright © 1976 Michel COLOMBAN
This sheet is one of a set for the CRICRI MC 15 airplane intended for use by an amateur builder holding a valid license for construction of a single example of this aircraft. Any other use of this plan, in whole or in part, will be deemed fraudulent.

107

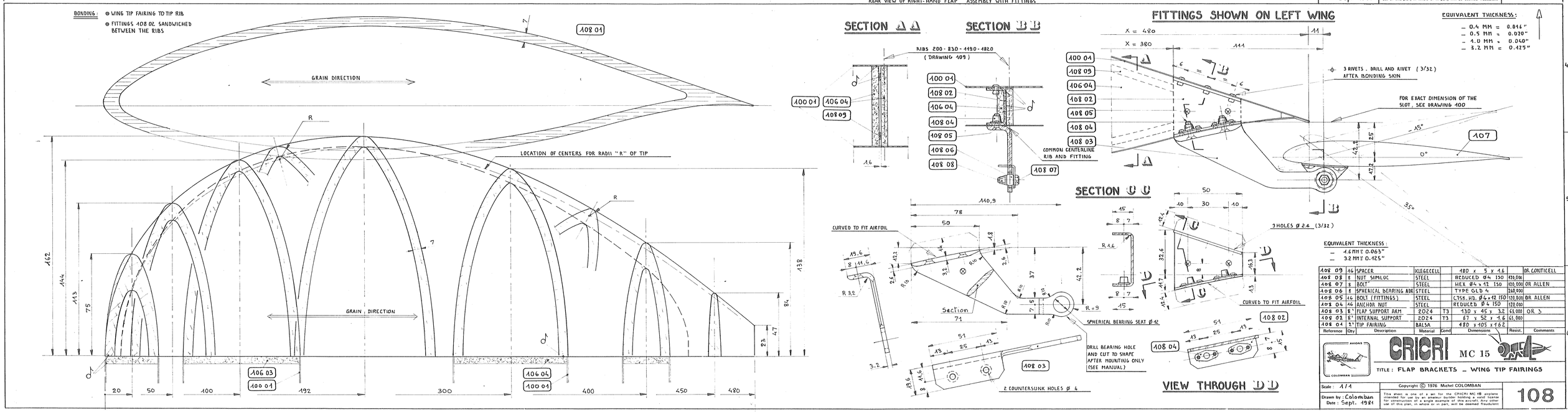


EQUIVALENT THICKNESS:
- 0.4 MM = 0.016"
- 0.5 MM = 0.020"
- 1.0 MM = 0.040"
- 3.2 MM = 0.125"

EQUIVALENT THICKNESS:
- 4.6 MM ≅ 0.063"
- 3.2 MM ≅ 0.125"

| Reference | Qty | Description | Material | Cond | Dimensions | Resist. | Comments |
|---|---|---|---|---|---|---|---|
| 108 09 | 16 | SPACER | KLEGECELL | | 120 x 5 x 4.6 | | OR CONTICELL |
| 108 08 | 8 | NUT SIMLOC | STEEL | | REDUCED Ø 4 ISO | 120.000 | |
| 108 07 | 8 | BOLT | STEEL | | HEX Ø 4 x 12 ISO | 120.000 | OR ALLEN |
| 108 06 | 8 | SPHERICAL BEARING AN | STEEL | | TYPE GLO 4 | 240.000 | |
| 108 05 | 16 | BOLT (FITTINGS) | STEEL | | CTSK. HD. Ø 4 x 12 ISO | 120.000 | OR ALLEN |
| 108 04 | 16 | ANCHOR NUT | STEEL | | REDUCED Ø 4 ISO | 120.000 | |
| 108 03 | 8* | FLAP SUPPORT ARM | 2024 | T3 | 130 x 45 x 3.2 | 63.000 | OR 3 |
| 108 02 | 8* | INTERNAL SUPPORT | 2024 | T3 | 67 x 52 x 1.6 | 63.000 | |
| 108 01 | 2* | TIP FAIRING | BALSA | | 480 x 105 x 62 | | |

CRICRI MC 15

TITLE: FLAP BRACKETS - WING TIP FAIRINGS

Scale: 1/1

Drawn by: Colomban
Date: Sept. 1981

Copyright © 1976 Michel COLOMBAN
This sheet is one of a set for the CRICRI MC 15 airplane intended for use by an amateur builder holding a valid license for construction of a single example of this aircraft. Any other use of this plan, in whole or in part, will be deemed fraudulent.

108

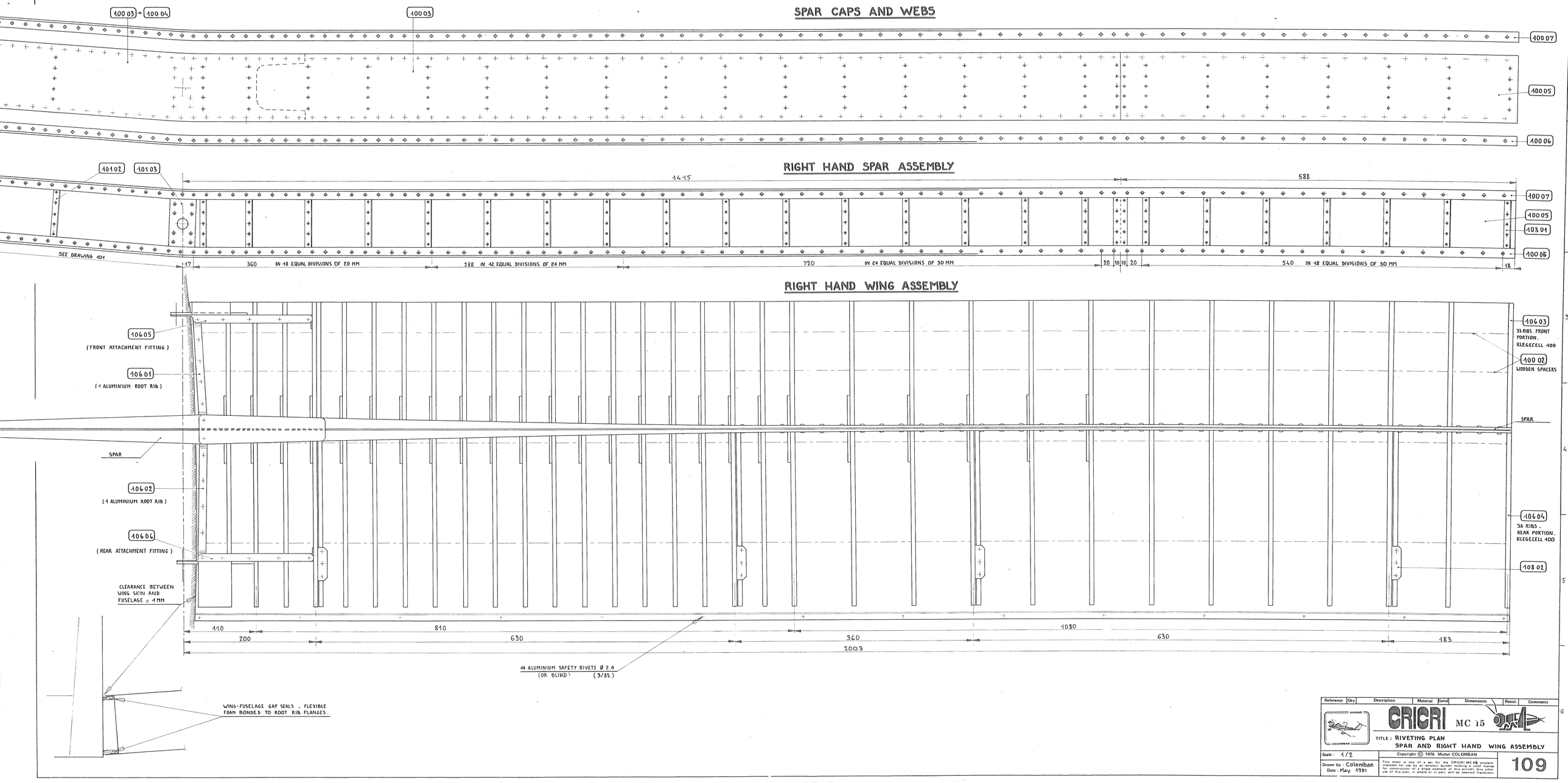
SPAR CAPS AND WEBS
100 03
100 04
100 03
100 07
100 05
100 06
RIGHT HAND SPAR ASSEMBLY
101 02
101 03
1415
588
100 07
100 05
103 04
100 06
SEE DRAWING 101
17
360 IN 18 EQUAL DIVISIONS OF 20 MM
288 IN 12 EQUAL DIVISIONS OF 24 MM
720 IN 24 EQUAL DIVISIONS OF 30 MM
20 10 10 20
540 IN 18 EQUAL DIVISIONS OF 30 MM
18
RIGHT HAND WING ASSEMBLY
106 05
(FRONT ATTACHMENT FITTING)
106 01
(1 ALUMINIUM ROOT RIB)
SPAR
106 02
(1 ALUMINIUM ROOT RIB)
106 06
(REAR ATTACHMENT FITTING)
CLEARANCE BETWEEN WING SKIN AND FUSELAGE = 1 MM
106 03
33 RIBS. FRONT PORTION. KLEGECELL 100
100 02
WOODEN SPACERS
SPAR
106 04
36 RIBS. REAR PORTION. KLEGECELL 100
108 02
110
810
1080
200
630
360
630
183
2003
44 ALUMINIUM SAFETY RIVETS Ø 2.4 (OR BLIND) (3/32)
WING-FUSELAGE GAP SEALS. FLEXIBLE FOAM BONDED TO ROOT RIB FLANGES.
Reference | Qty | Description | Material | Cond | Dimensions | Resist. | Comments
AVIONS COLOMBAN
CRICRI MC 15
TITLE: RIVETING PLAN
SPAR AND RIGHT HAND WING ASSEMBLY
Scale: 1/2
Drawn by: Colomban
Date: May 1981
Copyright © 1976 Michel COLOMBAN
This sheet is one of a set for the CRICRI MC 15 airplane intended for use by an amateur builder desiring a solid reference for construction of a single exemplar of this aircraft. Any other use of this plan, in whole or in part, will be deemed fraudulent
109

SIDE VIEW THROUGH SYMETRICAL PLAN

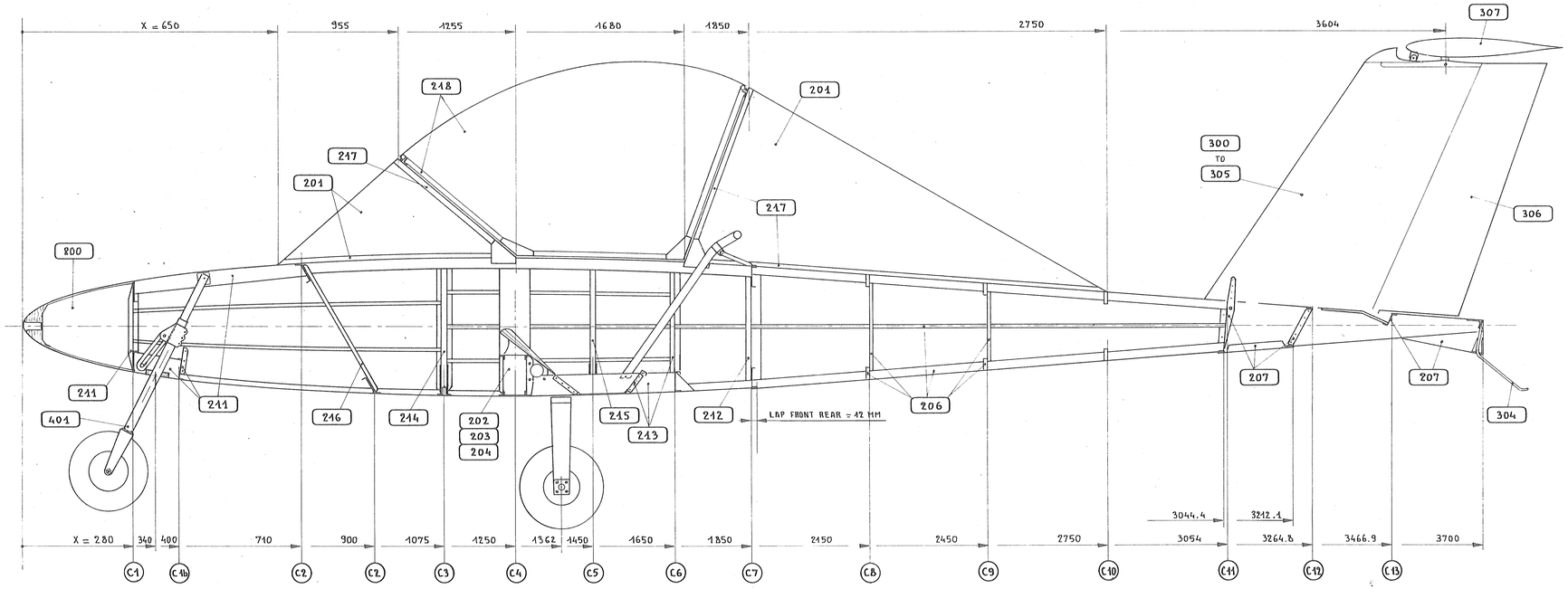


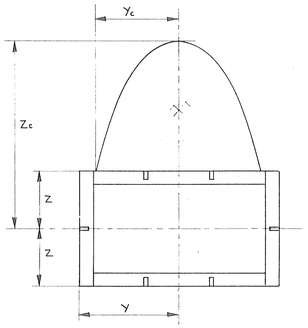


OUTSIDE DIMENSIONS

| | | FUSELAGE | | COCKPIT | |
|---|---|---|---|---|---|
| | X | Y | Z | Yc | Zc |
| | 15 | 42.5 | 29.0 | | |
| | 30 | 58.6 | 40.5 | | |
| | 50 | 73.5 | 52.1 | | |
| | 75 | 88.1 | 63.5 | | |
| | 100 | 100.6 | 72.8 | | |
| | 140 | 118.5 | 85.0 | | |
| | 180 | 134.5 | 95.2 | | |
| | 260 | 161.6 | 112.0 | | |
| 1 | 280 | 168.1 | 115.6 | | |
| | 330 | 181.3 | 123.3 | | |
| 1b | 400 | | 132.9 | | |
| | 450 | 210.9 | 138.9 | | |
| | 600 | 239.4 | 152.9 | | |
| | 650 | | 156.4 | 0.0 | 156.4 |
| | 660 | | | 52.0 | |
| | 680 | | | 88.2 | |
| 2 | 710 | 256.1 | 160.2 | 119.8 | |
| | 750 | | | 150.0 | |
| | 800 | | | 178.1 | |
| | 850 | | | 200.4 | |
| 3 | 900 | 278.0 | 169.4 | 219.0 | |
| | 955 | | 171.1 | 236.0 | 424.0 |
| 3 | 1075 | 291.3 | 173.6 | 265.1 | 514.3 |
| | 1150 | | | 277.4 | 560.0 |
| 4 | 1250 | 298.4 | 174.6 | | |
| | 1255 | 298.5 | 174.6 | 288.7 | 609.4 |
| | 1350 | | | 293.4 | 641.5 |
| 5 | 1450 | 298.9 | 172.3 | 294.0 | 663.0 |
| | 1550 | | | 290.5 | 672.0 |
| 6 | 1650 | 290.8 | 166.0 | | |
| | 1680 | 288.4 | 164.6 | 278.6 | 662.0 |
| 7 | 1850 | 270.3 | 154.3 | 251.0 | 605.0 |
| 8 | 2150 | 228.9 | 131.7 | 185.7 | |
| 9 | 2450 | 187.5 | 109.1 | 104.4 | |
| 10 | 2750 | 146.1 | 86.5 | 0.0 | 86.5 |
| 11 | 3044 | 105.5 | 64.4 | | |
| | 3054 | 104.2 | 63.7 | | |
| | 3212 | 82.3 | 51.8 | | |
| 12 | 3265 | 75.0 | 47.8 | | |
| 13 | 3467 | 47.2 | 32.5 | | |
| | 3700 | 45.0 | 45.0 | | |

RIGHT SIDE TOP VIEW

LEFT SIDE WITHOUT TOP SKIN AND LATERAL STIFFENERS

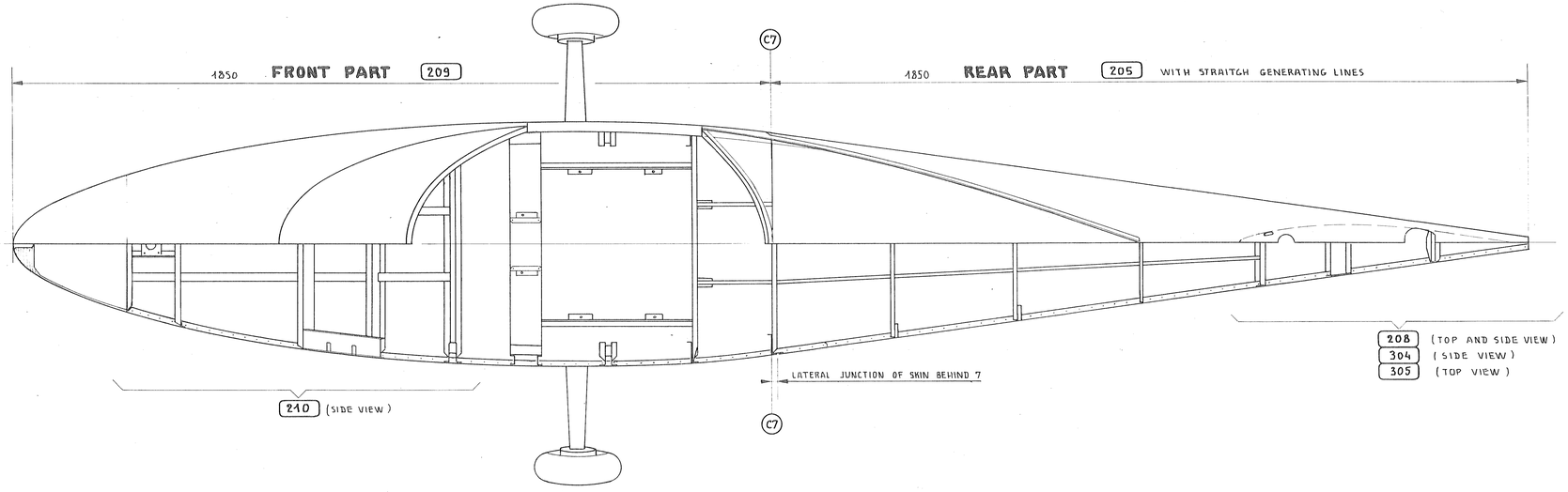


| Reference | Qty | Description | Material | Cond | Dimensions | Resist. | Comments |
|---|---|---|---|---|---|---|---|

AVIONS COLOMBAN

CRICRI MC 15

TITLE : FUSELAGE _ GENERAL

Scale : 1/5

Drawn by : Colomban
Date : Sept. 1981

Copyright © 1976 Michel COLOMBAN
This sheet is one of a set for the CRICRI MC 15 airplane intended for use by an amateur builder holding a valid license for construction of a single example of this aircraft. Any other use of this plan, in whole or in part, will be deemed fraudulent

200

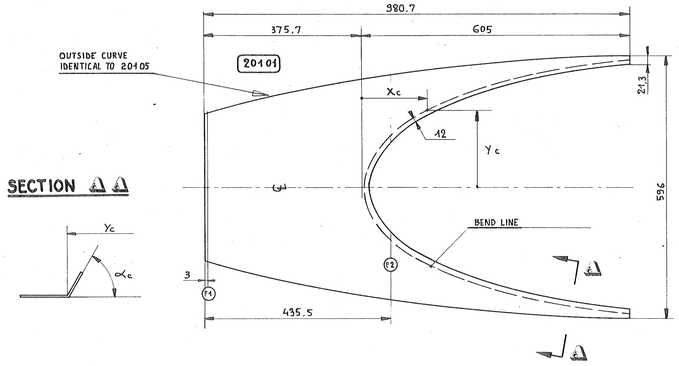


| BEND LINE CO-ORDINATES | | BEND ANGLE |
|---|---|---|
| Xc | Yc | αc |
| 0.5 | 0.0 | 38.0 |
| 1.0 | 50.7 | 39.5 |
| 3.0 | 87.3 | 42.4 |
| 6.0 | 119.1 | 46.2 |
| 10.0 | 149.4 | 50.5 |
| 15.0 | 177.5 | 54.5 |
| 20.0 | 199.3 | 58.0 |
| 25.0 | 218.5 | 60.2 |
| 30.5 | 235.5 | 63.0 |
| 42.5 | 264.6 | 67.0 |
| 50.0 | 276.9 | 68.5 |
| 60.5 | 288.2 | 70.0 |

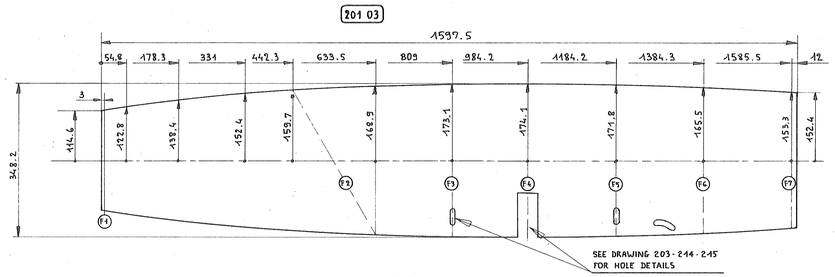


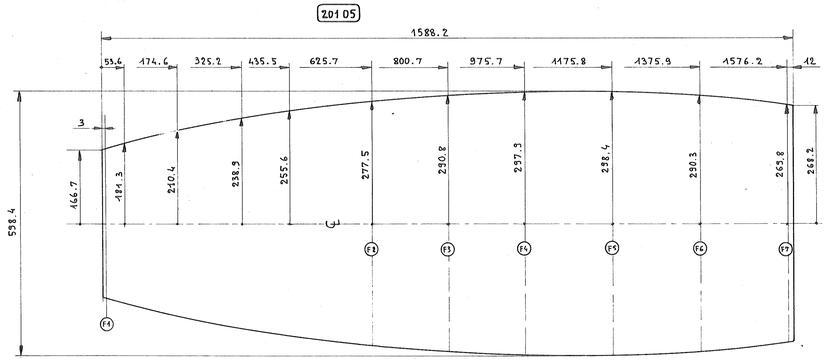


## SECTION OF AN ANGLE FORWARD OF FRAME 7

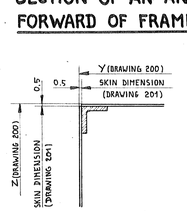


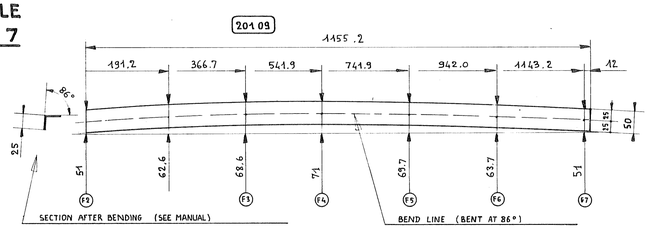


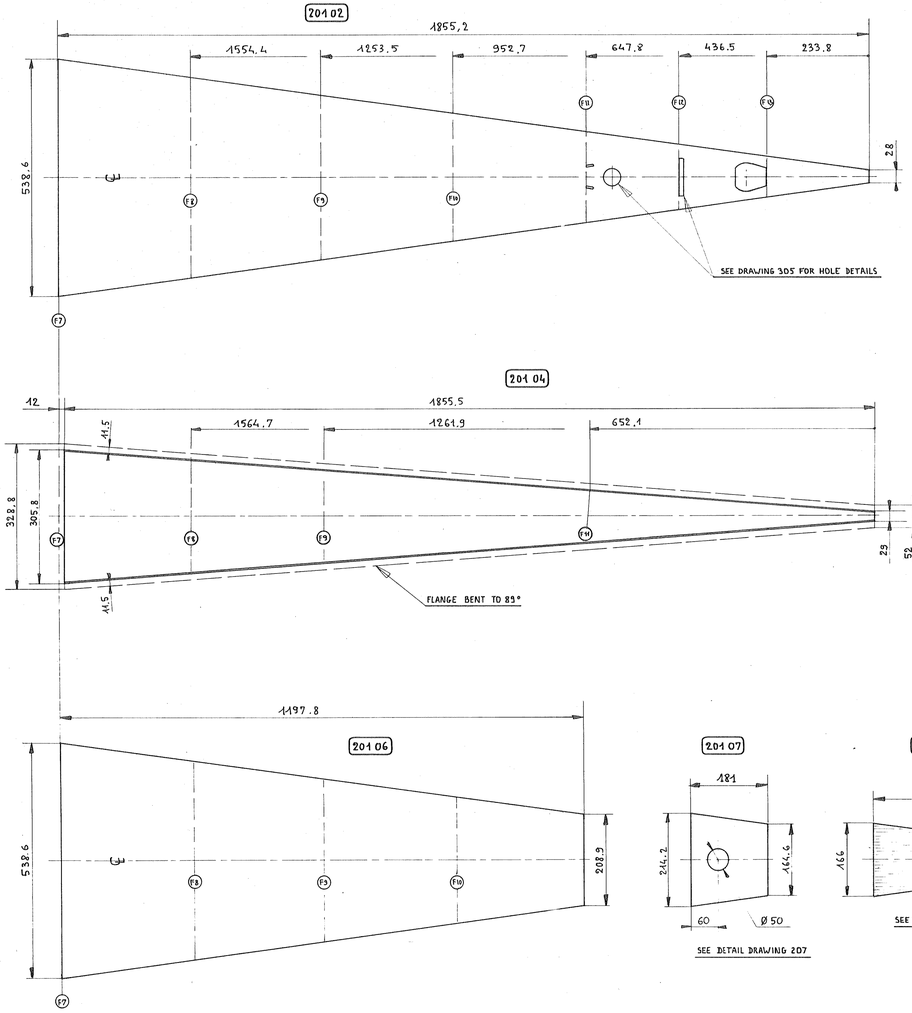


## ASSEMBLY SCHEMATIC UPPER AND LOWER SKINS

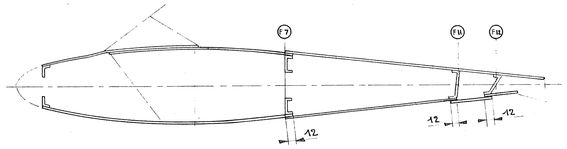


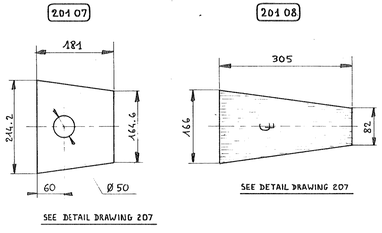


## ASSEMBLY SCHEMATIC SIDE SKINS

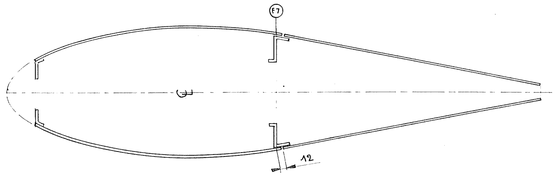


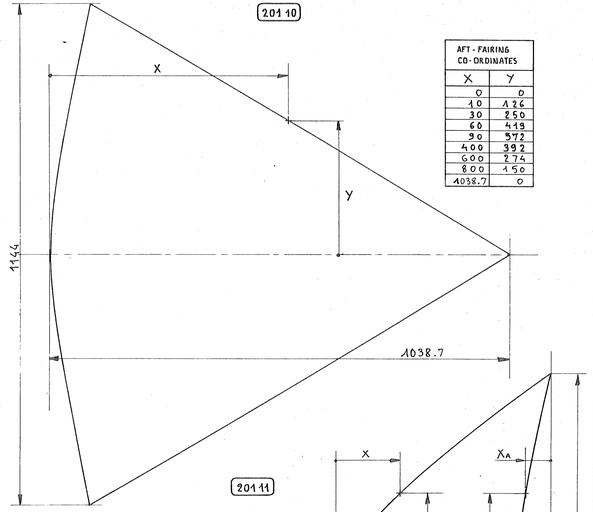


| AFT-FAIRING CO-ORDINATES | |
|---|---|
| X | Y |
| 0 | 0 |
| 1.0 | 126 |
| 3.0 | 250 |
| 6.0 | 419 |
| 9.0 | 572 |
| 14.00 | 392 |
| 16.00 | 274 |
| 18.00 | 150 |
| 1038.7 | 0 |

## SECTION OF AN ANGLE OF 20104 PERPENDICULAR TO THE EDGE

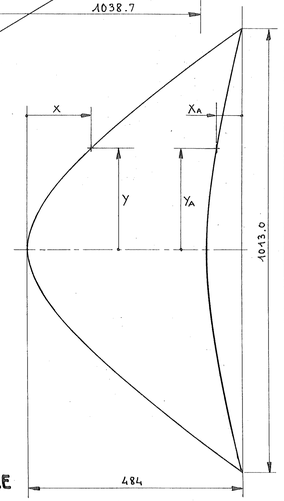


| CANOPY COWL CO-ORDINATES | |
|---|---|
| X | Y |
| 0 | 0.0 |
| 2.0 | 80.0 |
| 6.0 | 142.3 |
| 12.0 | 208.0 |
| 20.0 | 281.0 |
| 28.0 | 349.0 |
| 36.0 | 412.6 |
| 48.4 | 506.5 |
| XA | YA |
| 77 | 0 |
| 75 | 60 |
| 64 | 160 |
| 40 | 300 |
| 0 | 506.5 |

## SECTION OF AN ANGLE AFT OF FRAME 7

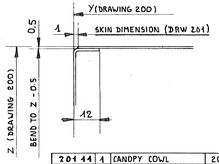


EQUIVALENT THICKNESS :
- 0.5MM ≅ 0.020"
- 0.8MM ≅ 0.032"

| Reference | Qty | Description | Material | Cond | Dimensions | Resist. | Comments |
|---|---|---|---|---|---|---|---|
| 201 44 | 1 | CANOPY COWL | 2024 | T3 | 1013 x 484 x 0.5 | 63,000 | |
| 201 10 | 1 | CANOPY AFT FAIRING | POLYCARBONATE | | 1144 x 1038 x 0.8 | | OR 1 |
| 201 09 | 2* | COCKPIT BORDER | 2024 | | 1157 x 83 x 0.5 | 63,000 | |
| 201 08 | 4 | LOWER AFT SKIN | POLYCARBONATE | | 305 x 166 x 0.8 | | OR 1 |
| 201 07 | 4 | INSPECTION PORT | 2024 | T3 | 245 x 184 x 0.5 | 63,000 | |
| 201 06 | 1 | BELLY SKIN - REAR | 2024 | T3 | 1198 x 535 x 0.5 | 63,000 | |
| 201 05 | 1 | BELLY SKIN - FORWARD | 2024 | T3 | 1588 x 535 x 0.5 | 63,000 | |
| 201 04 | 2* | SIDE SKIN - REAR | 2024 | T3 | 1856 x 329 x 0.5 | 63,000 | |
| 201 03 | 2* | SIDE SKIN - FRONT | 2024 | T3 | 1600 x 349 x 0.5 | 63,000 | |
| 201 02 | 1 | REAR DECK | 2024 | T3 | 1856 x 539 x 0.5 | 63,000 | |
| 201 01 | 1 | FOREWARD DECK | 2024 | T3 | 981 x 596 x 0.5 | 63,000 | |

AVIONS COLOMBAN

CRICRI MC 15

TITLE : FUSELAGE SKINS DIMENSIONS

Scale : 1/5 1/4

Drawn by : Colomban

Date : May 1981

Copyright © 1976 Michel COLOMBAN

This sheet is one of a set for the CRICRI MC 15 airplane intended for use by an amateur builder holding a valid license for construction of a single example of this aircraft. Any other use of this plan, in whole or in part, will be deemed fraudulent.

201

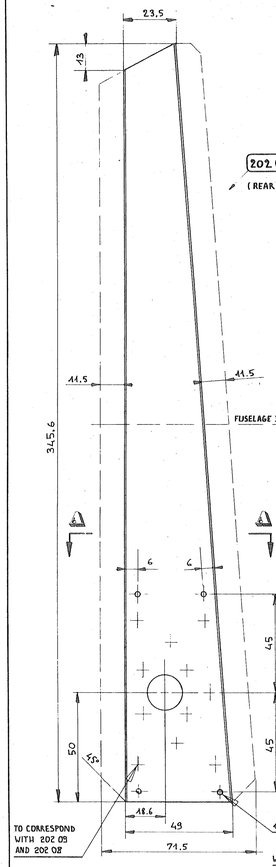


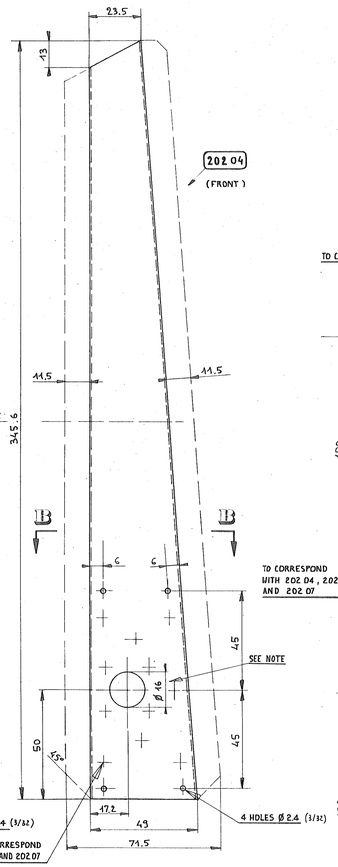


## SECTION A A

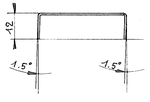


## SECTION B B

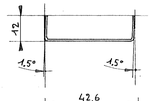


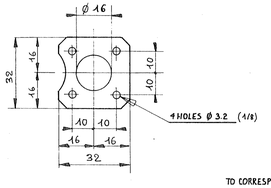


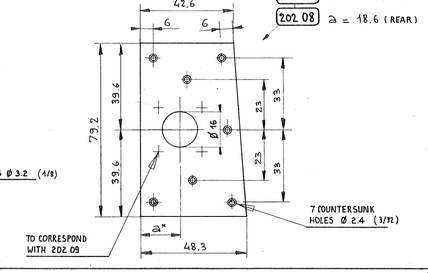


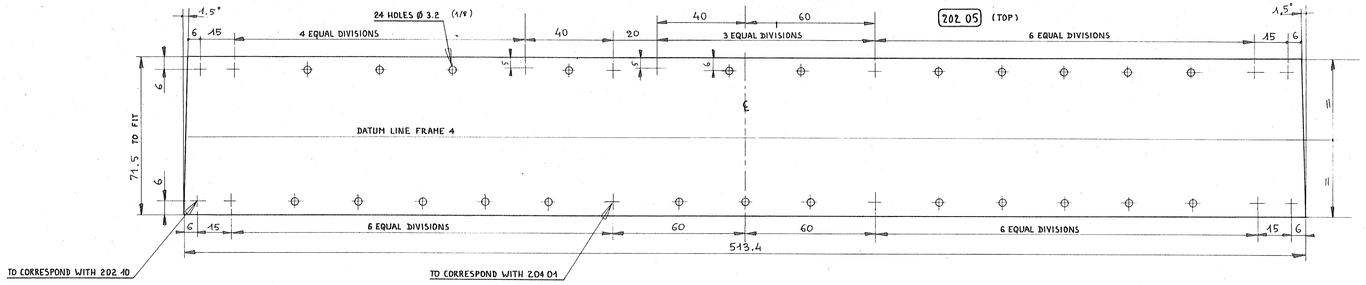


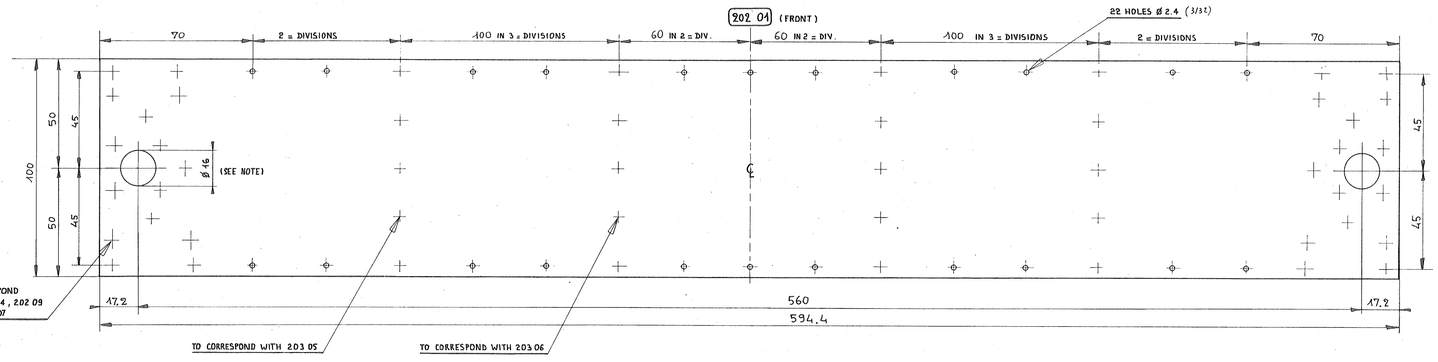


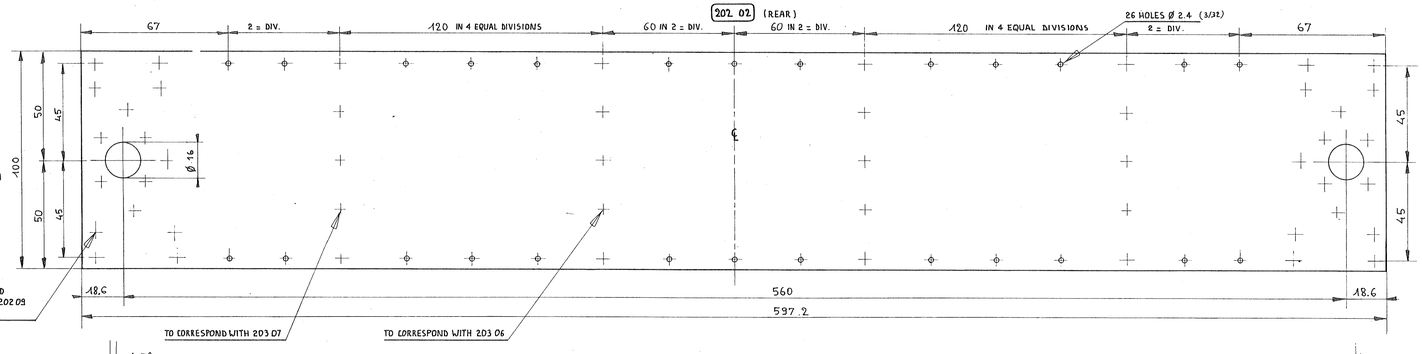


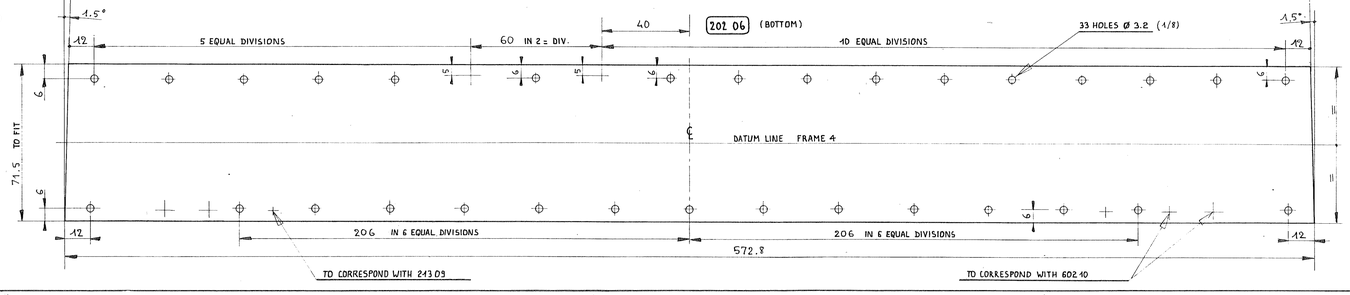


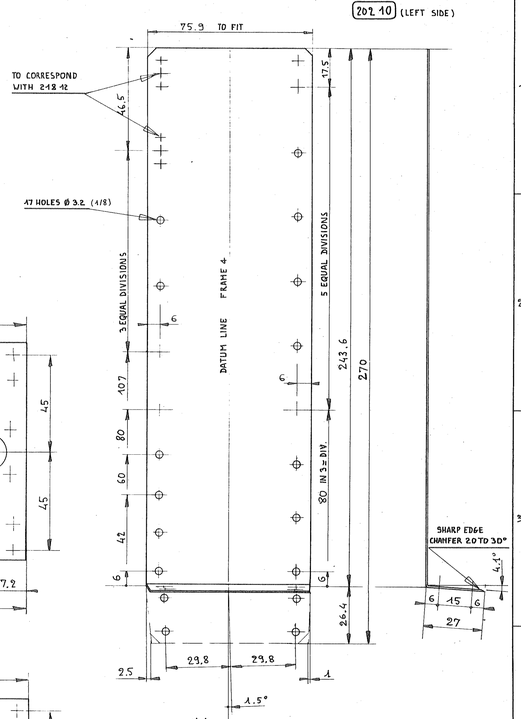

**Note**

DO NOT REAM WING PIN HOLES UNTIL THE TWO SPARS ARE ASSEMBLED TO THE FINISHED FRAME 4 .

## ASSEMBLY SEQUENCE

- FRONT FACE :
  1. WEB 202 04 TO CAPS 203 04 AND 203 03
  2. THEN VERTICAL WEBS 202 04
  3. THEN REINFORCEMENTS 202 07
  4. THEN PLATES 202 09
  5. THEN STIFFENERS 203 05 AND 203 06

  ON "MOLD" WITH DRILL BUSHES IN FRONT OF THE ATTACH PIN HOLES.
- REAR FACE :

  SAME SEQUENCE
- FIT FRONT AND REAR FACES TO THE ASSEMBLED SPAR, AND THEN ATTACH :
  1. LOWER COVER 202 06
  2. UPPER COVER 202 05
  3. SIDE COVERS 202 10

  WIDTH TO ADJUST

EQUIVALENT THICKNESS:

- 0.5MM ≅ 0.020"
- 1 MM ≅ 0.040"
- 4 MM ≅ 0.160"

| Reference | Qty. | Description | Material | Cond. | Dimensions | Resist. | Comments |
|---|---|---|---|---|---|---|---|
| 202 10 | 2* | SIDE COVER | 2024 | T3 | 270 x 75 x 0.5 | 63,000 | |
| 202 09 | 4 | PLATE | 2024 | T3 | 32 x 32 x 4 | 63,000 | |
| 202 08 | 2* | REINFORCEMENT - REAR | 2024 | T3 | 79.2 x 48.3 x 1 | 63,000 | |
| 202 07 | 2* | REINFORCEMENT - FRONT | 2024 | T3 | 79.2 x 48.3 x 1 | 63,000 | |
| 202 06 | 1 | LOWER COVER | 2024 | T3 | 572.7 x 71.5 x 0.5 | 63,000 | |
| 202 05 | 1 | UPPER COVER | 2024 | T3 | 513.4 x 71.5 x 0.5 | 63,000 | |
| 202 04 | 2* | VERTICAL WEB - FRONT | 2024 | T3 | 345.6 x 71.5 x 0.5 | 63,000 | |
| 202 03 | 2* | VERTICAL WEB - REAR | 2024 | T3 | 345.6 x 71.5 x 0.5 | 63,000 | |
| 202 02 | 1 | TRANSVERSE WEB - REAR | 2024 | T3 | 597.2 x 100 x 0.5 | 63,000 | |
| 201 01 | 1 | TRANSVERSE WEB - FRONT | 2024 | T3 | 594.4 x 100 x 0.5 | 63,000 | |

AVIONS COLOMBAN — CRICRI MC 15

TITLE : FRAME 4 _ DETAILS

Scale : 1/1

Drawn by : Colomban
Date : May 1981

Copyright © 1976 Michel COLOMBAN

This sheet is one of a set for the CRICRI MC 15 airplane intended for use by an amateur builder holding a valid license for construction of a single example of this aircraft. Any other use of this plan, in whole or in part, will be deemed fraudulent.

202

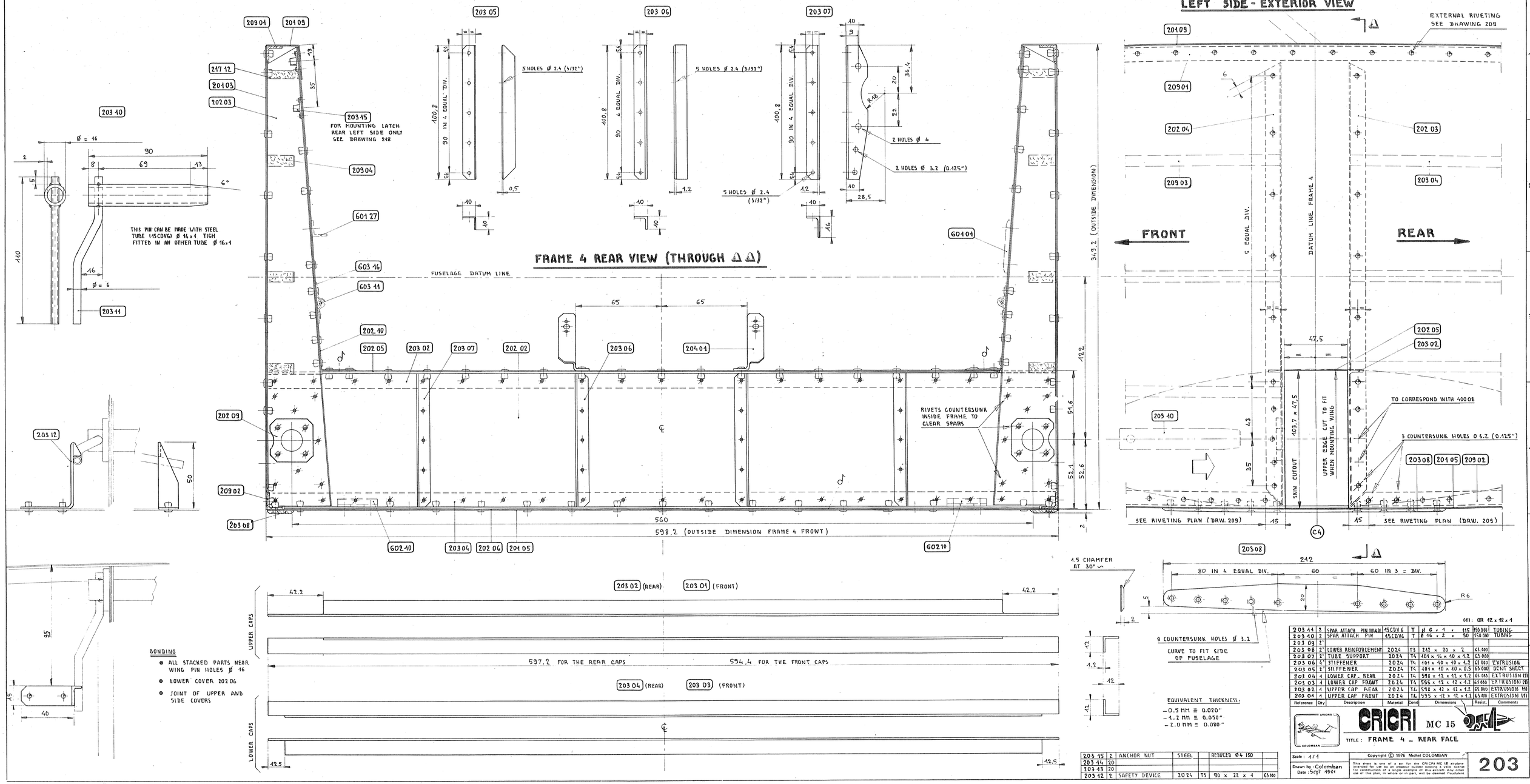


| Reference | Qty | Description | Material | Cond | Dimensions | Resist. | Comments |
|---|---|---|---|---|---|---|---|
| 203 11 | 2 | SPAR ATTACH PIN BUSH | 45CDV6 | T | Ø 6 x 1 x 115 | 150 000 | TUBING |
| 203 10 | 2 | SPAR ATTACH PIN | 45CDV6 | T | Ø 16 x 2 x 90 | 150 000 | TUBING |
| 203 09 | 2 | | | | | | |
| 203 08 | 2 | LOWER REINFORCEMENT | 2024 | T3 | 212 x 20 x 2 | 65 000 | |
| 203 07 | 2 | TUBE SUPPORT | 2024 | T4 | 401 x 16 x 10 x 1.2 | 65 000 | |
| 203 06 | 4 | STIFFENER | 2024 | T4 | 401 x 40 x 10 x 1.2 | 65 000 | EXTRUSION |
| 203 05 | 2 | STIFFENER | 2024 | T4 | 401 x 40 x 40 x 0.5 | 65 000 | SHEET METAL |
| 203 04 | 4 | LOWER CAP _ REAR | 2024 | T4 | 598 x 42 x 42 x 1.2 | 65 000 | EXTRUSION (1) |
| 203 03 | 4 | LOWER CAP FRONT | 2024 | T4 | 595 x 42 x 42 x 1.2 | 65 000 | EXTRUSION (1) |
| 203 02 | 4 | UPPER CAP _ REAR | 2024 | T4 | 598 x 42 x 42 x 1.2 | 65 000 | EXTRUSION (1) |
| 203 01 | 4 | UPPER CAP FRONT | 2024 | T4 | 595 x 42 x 42 x 1.2 | 65 000 | EXTRUSION (1) |

| | | | | | | | |
|---|---|---|---|---|---|---|---|
| 203 15 | 2 | ANCHOR NUT | STEEL | | REDUCED Ø4 150 | | |
| 203 14 | 20 | | | | | | |
| 203 13 | 20 | | | | | | |
| 203 12 | 2 | SAFETY DEVICE | 2024 | T3 | 90 x 22 x 1 | 65 000 | |

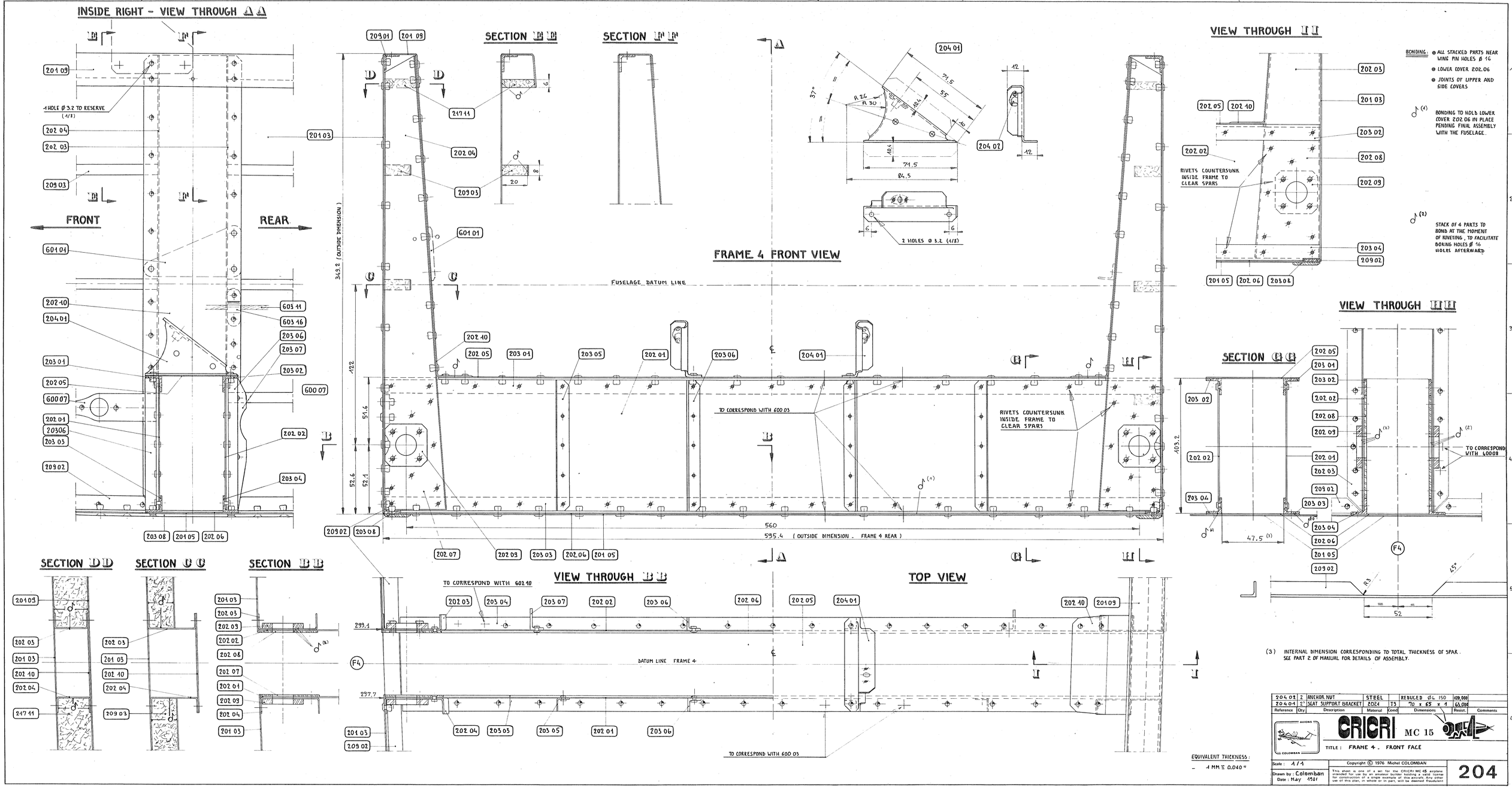
INSIDE RIGHT - VIEW THROUGH AA
SECTION BB
SECTION FF
VIEW THROUGH JJ
FRAME 4 FRONT VIEW
VIEW THROUGH HH
SECTION GG
SECTION DD
SECTION EE
SECTION BB
VIEW THROUGH BB
TOP VIEW
FRONT
REAR
1 HOLE Ø 3.2 TO RESERVE (4/8)
2 HOLES Ø 3.2 (4/8)
FUSELAGE DATUM LINE
TO CORRESPOND WITH 600 03
RIVETS COUNTERSUNK INSIDE FRAME TO CLEAR SPARS
TO CORRESPOND WITH 600 10
DATUM LINE FRAME 4
TO CORRESPOND WITH 600 08
348.2 ( OUTSIDE DIMENSION )
560
595.4 ( OUTSIDE DIMENSION - FRAME 4 REAR )
BONDING:
ALL STACKED PARTS NEAR WING PIN HOLES Ø 16
LOWER COVER 202.06
JOINTS OF UPPER AND SIDE COVERS
BONDING TO HOLD LOWER COVER 202 06 IN PLACE PENDING FINAL ASSEMBLY WITH THE FUSELAGE.
STACK OF 4 PARTS TO BOND AT THE MOMENT OF RIVETING, TO FACILITATE BORING HOLES Ø 16 HOLES AFTERWARD
(3) INTERNAL DIMENSION CORRESPONDING TO TOTAL THICKNESS OF SPAR. SEE PART 2 OF MANUAL FOR DETAILS OF ASSEMBLY.
EQUIVALENT THICKNESS:
- 1 MM ≡ 0.040"
204 02 | 2 | ANCHOR NUT | STEEL | REDUCED ØL 150 | 420,000
204 01 | 2 | SEAT SUPPORT BRACKET | 2024 | T3 | 70 x 65 x 1 | 65,000
Reference | Qty | Description | Material | Cond | Dimensions | Resist. | Comments
CRICRI MC 15
TITLE: FRAME 4 - FRONT FACE
Scale: 1/1
Drawn by: Colomban
Date: May 1981
Copyright © 1976 Michel COLOMBAN
This sheet is one of a set for the CRICRI MC 15 airplane intended for use by an amateur builder holding a valid license for construction of a single example of this aircraft. Any other use of this plan, in whole or in part, will be deemed fraudulent
204

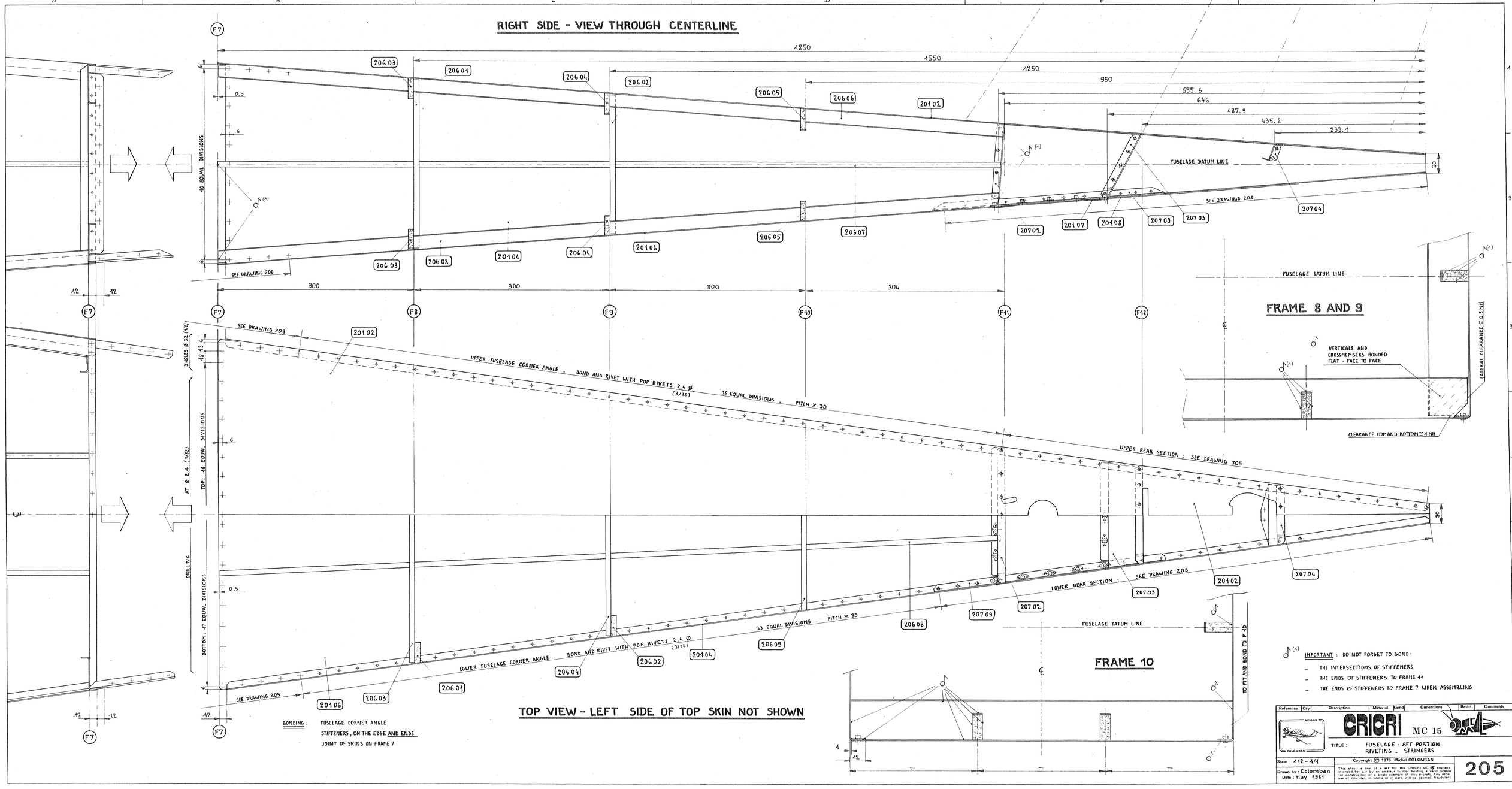
RIGHT SIDE - VIEW THROUGH CENTERLINE
1850
1550
1250
950
655.6
646
487.9
435.2
233.1
40 EQUAL DIVISIONS
FUSELAGE DATUM LINE
SEE DRAWING 208
SEE DRAWING 209
300
300
300
304
F7
F8
F9
F10
F11
F12
SEE DRAWING 209
UPPER FUSELAGE CORNER ANGLE - BOND AND RIVET WITH POP RIVETS 2.4 Ø (3/32)
36 EQUAL DIVISIONS - PITCH ≅ 30
UPPER REAR SECTION : SEE DRAWING 305
LOWER REAR SECTION : SEE DRAWING 208
LOWER FUSELAGE CORNER ANGLE - BOND AND RIVET WITH POP RIVETS 2.4 Ø (3/32)
33 EQUAL DIVISIONS PITCH ≅ 30
SEE DRAWING 209
HOLES Ø 3.2 (1/8)
AT Ø 2.4 (3/32)
TOP : 46 EQUAL DIVISIONS
BOTTOM : 47 EQUAL DIVISIONS
DRILLING
FRAME 8 AND 9
VERTICALS AND CROSSMEMBERS BONDED FLAT - FACE TO FACE
LATERAL CLEARANCE ≅ 0.5 MM
CLEARANCE TOP AND BOTTOM ≅ 4 MM
FRAME 10
TO FIT AND BOND TO F 40
TOP VIEW - LEFT SIDE OF TOP SKIN NOT SHOWN
BONDING : FUSELAGE CORNER ANGLE
STIFFENERS, ON THE EDGE AND ENDS
JOINT OF SKINS ON FRAME 7
IMPORTANT : DO NOT FORGET TO BOND :
- THE INTERSECTIONS OF STIFFENERS
- THE ENDS OF STIFFENERS TO FRAME 11
- THE ENDS OF STIFFENERS TO FRAME 7 WHEN ASSEMBLING
Reference | Qty | Description | Material | Cond | Dimensions | Resist. | Comments
CRICRI MC 15
TITLE : FUSELAGE - AFT PORTION
RIVETING - STRINGERS
Scale : 1/2 - 1/1
Drawn by : Colomban
Date : May 1981
Copyright © 1976 Michel COLOMBAN
This sheet is one of a set for the CRICRI MC 15 airplane intended for use by an amateur builder holding a valid license for construction of a single example of this aircraft. Any other use of this plan, in whole or in part, will be deemed fraudulent
205

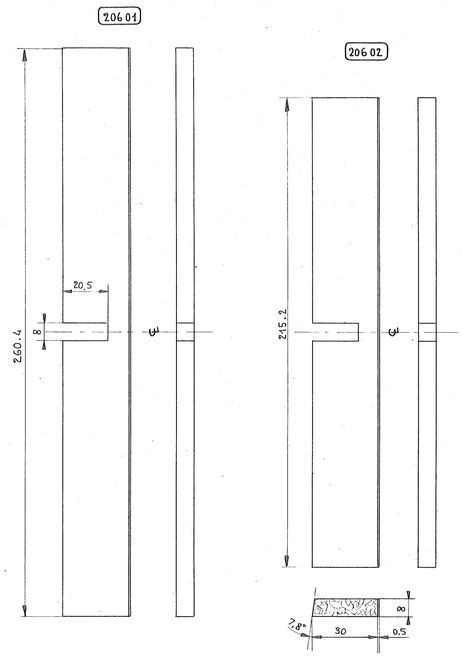

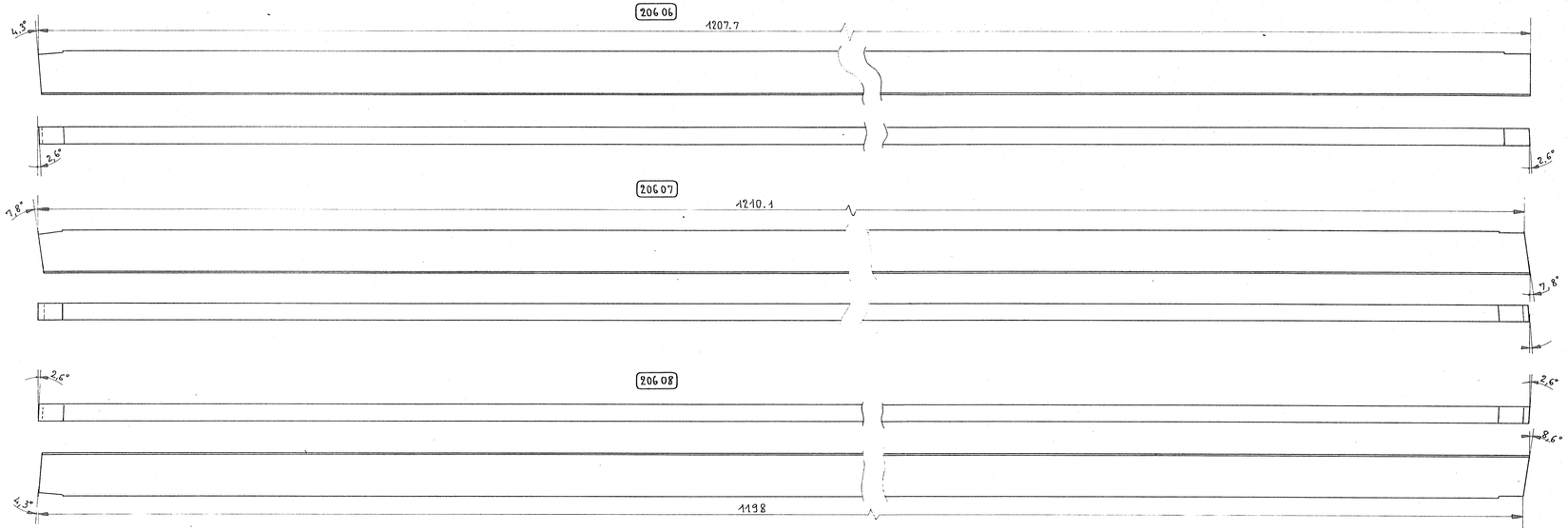


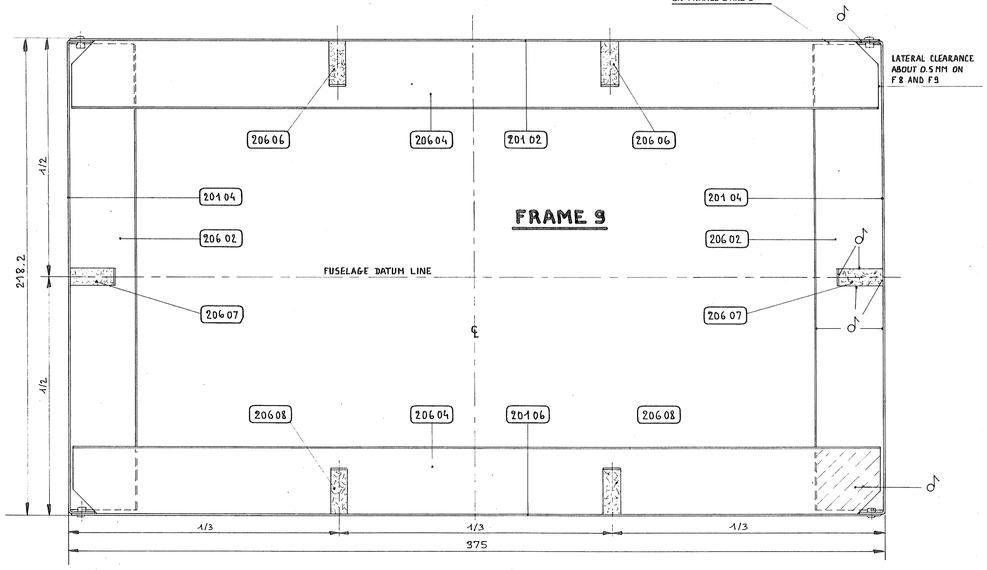


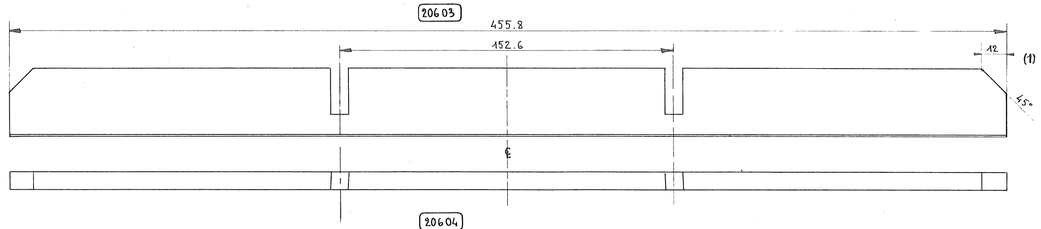


(1) ALL STIFFENERS ARE MADE UP OF :

- A WEB OF KLEGECELL 75 (OR CONTICELL 60) 20 x 8 OR 30 x 8, IN ONE OR SEVERAL PIECES JOINED BY SIMPLE BONDING
- A CAP IN 2024 T3 OF 0.50 THICKNESS IN A SINGLE PIECE BONDED TO THE KLEGECELL

THEY ARE BONDED AGAINST THE SKINS AND ON THE ENDS FOR THE LONGITUDINALS AND CROSSMEMBERS F10

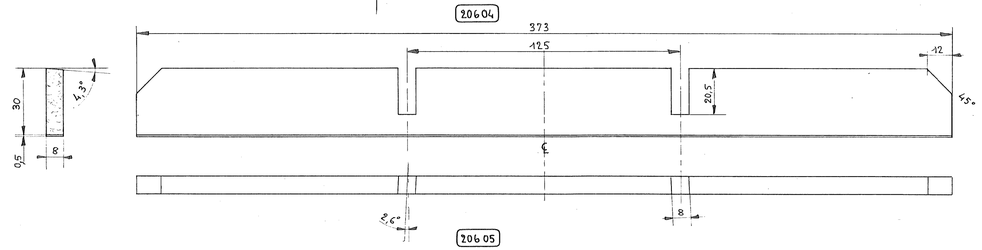


ALL THE LENGTH DIMENSIONS ARE VALID FOR A PERFECTLY MADE FUSELAGE. IN PRACTICE, IT WILL BE NECESSARY TO CHECK AND FIT AS REQUIRED TO MAINTAIN THE END CLEARANCES SHOWN ON THE DRAWINGS.

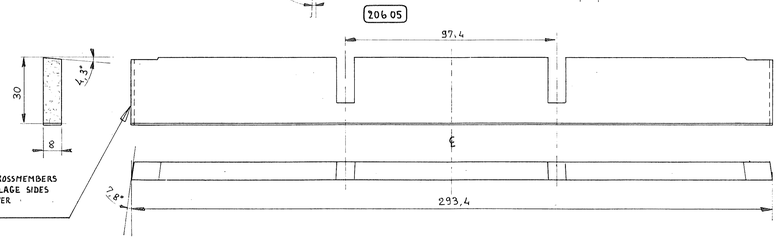


ENDS OF FRAME 10 CROSSMEMBERS TO FIT BETWEEN FUSELAGE SIDES AND TO BE BONDED OVER ENTIRE SURFACE

| Reference | Qty | Description | Material | Cond | Dimensions | | Resist. | Comments |
|---|---|---|---|---|---|---|---|---|
| 206 08 | 2 | STIFFENER - BOTTOM | KLEGECELL | 75 | 1245 x 20 x 8 | | | (1) |
| 206 07 | 2 | STIFFENER - SIDE | KLEGECELL | 75 | 1245 x 20 x 8 | | | (1) |
| 206 06 | 2 | STIFFENER - TOP | KLEGECELL | 75 | 1245 x 20 x 8 | | | (1) |
| 206 05 | 2 | TRANSVERSE - F 10 | KLEGECELL | 75 | 295 x 30 x 8 | | | (1) |
| 206 04 | 2 | TRANSVERSE - F 9 | KLEGECELL | 75 | 375 x 30 x 8 | | | (1) |
| 206 03 | 2 | TRANSVERSE - F 8 | KLEGECELL | 75 | 460 x 30 x 8 | | | (1) |
| 206 02 | 2 | VERTICAL - FRAME 9 | KLEGECELL | 75 | 220 x 30 x 8 | | | (1) |
| 206 04 | 2 | VERTICAL - FRAME 8 | KLEGECELL | 75 | 265 x 30 x 8 | | | (1) |

AVIONS COLOMBAN

CRICRI MC 15

TITLE : STIFFENERS - AFT PORTION OF FUSELAGE

Scale : 1/1

Drawn by : Colomban
Date : May 1981

Copyright © 1976 Michel COLOMBAN

This sheet is one of a set for the CRICRI MC 15 airplane intended for use by the amateur builder. The only license for construction of a single example of this design is the use of this plan, in whole or in part, will be deemed Fraudulent

206

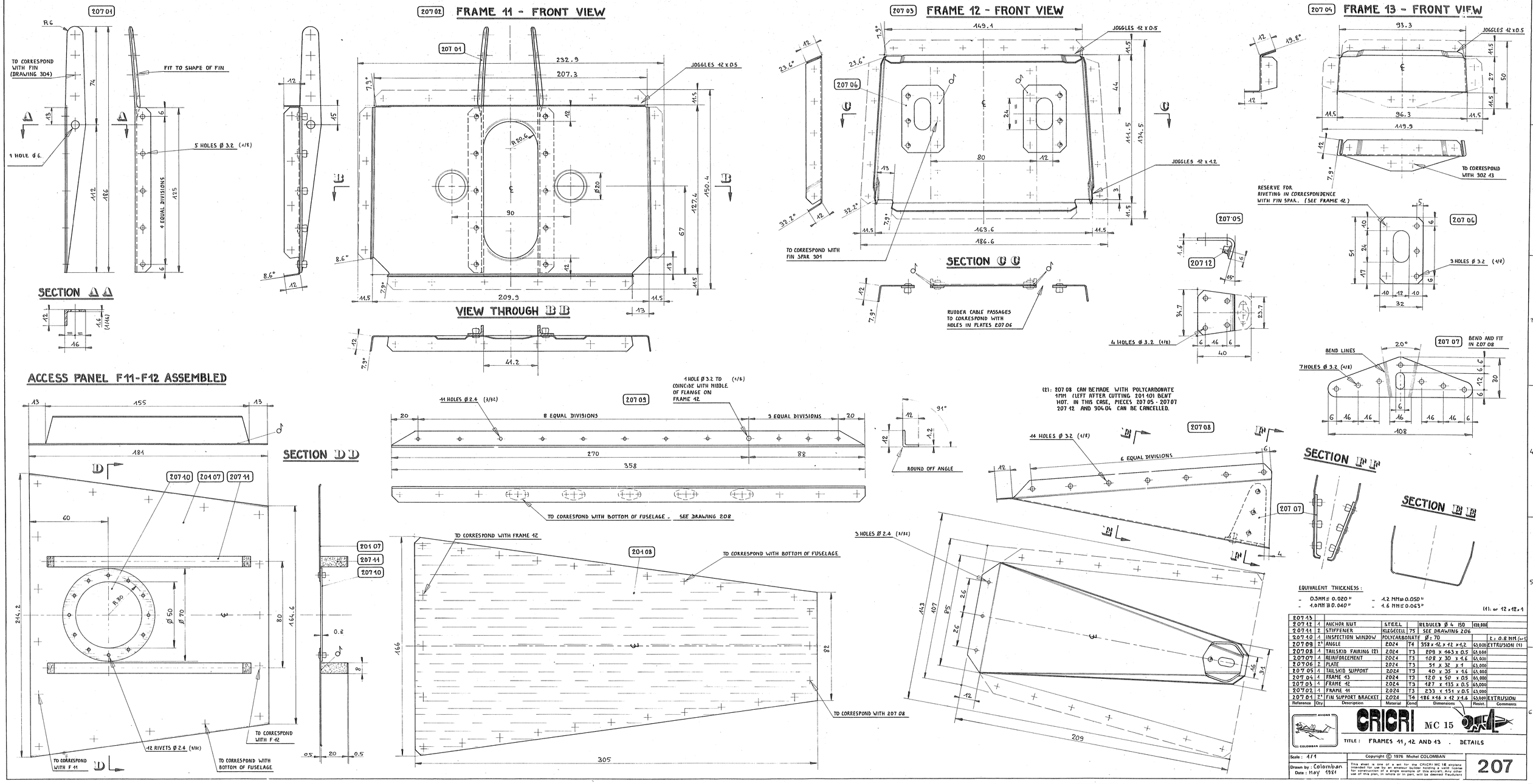
207 01
R6
TO CORRESPOND WITH FIN (DRAWING 304)
FIT TO SHAPE OF FIN
1 HOLE Ø 6.
5 HOLES Ø 3.2 (1/8)
4 EQUAL DIVISIONS
SECTION A A
207 02 FRAME 11 - FRONT VIEW
JOGGLES 12 x 0.5
VIEW THROUGH B B
207 03 FRAME 12 - FRONT VIEW
JOGGLES 12 x 0.5
JOGGLES 12 x 1.2
TO CORRESPOND WITH FIN SPAR 301
SECTION C C
RUDDER CABLE PASSAGES TO CORRESPOND WITH HOLES IN PLATES 207 06
207 04 FRAME 13 - FRONT VIEW
JOGGLES 12 x 0.5
TO CORRESPOND WITH 302 13
RESERVE FOR RIVETING IN CORRESPONDENCE WITH FIN SPAR. (SEE FRAME 12)
207 05
207 12
4 HOLES Ø 3.2 (1/8)
207 06
3 HOLES Ø 3.2 (1/8)
207 07
BEND AND FIT IN 207 08
BEND LINES
7 HOLES Ø 3.2 (1/8)
ACCESS PANEL F11-F12 ASSEMBLED
SECTION D D
207 10
201 07
207 11
12 RIVETS Ø 2.4 (3/32)
TO CORRESPOND WITH F 11
TO CORRESPOND WITH BOTTOM OF FUSELAGE
TO CORRESPOND WITH F 12
207 09
11 HOLES Ø 2.4 (3/32)
1 HOLE Ø 3.2 TO COINCIDE WITH MIDDLE OF FLANGE ON FRAME 12 (1/8)
8 EQUAL DIVISIONS
3 EQUAL DIVISIONS
TO CORRESPOND WITH BOTTOM OF FUSELAGE . SEE DRAWING 208
ROUND OFF ANGLE
(2): 207 08 CAN BE MADE WITH POLYCARBONATE 1MM (LEFT AFTER CUTTING 201 101 BEMT HOT. IN THIS CASE, PIECES 207 05 - 207 07 207 12 AND 304 04 CAN BE CANCELLED.
207 08
14 HOLES Ø 3.2 (1/8)
6 EQUAL DIVISIONS
SECTION E E
SECTION F F
SECTION B B
3 HOLES Ø 2.4 (3/32)
TO CORRESPOND WITH FRAME 12
TO CORRESPOND WITH BOTTOM OF FUSELAGE
TO CORRESPOND WITH 207 08
EQUIVALENT THICKNESS :
- 0.5MM ≅ 0.020"
- 1.0MM ≅ 0.040"
- 1.2 MM ≅ 0.050"
- 1.6 MM ≅ 0.063"
(1): or 12 x 12 x 1
207 13
207 12 1 ANCHOR NUT STEEL REDUCED Ø 4 150 120,000
207 11 2 STIFFENER KLEGECELL 75 SEE DRAWING 206
207 10 1 INSPECTION WINDOW POLYCARBONATE Ø = 70 t = 0.8 MM (or 1)
207 09 2* ANGLE 2024 T4 358 x 12 x 12 x 1.2 63,000 EXTRUSION (1)
207 08 1 TAILSKID FAIRING (2) 2024 T3 209 x 146 x 0.5 63,000
207 07 1 REINFORCEMENT 2024 T3 108 x 30 x 1.6 63,000
207 06 2 PLATE 2024 T3 51 x 32 x 1 63,000
207 05 1 TAILSKID SUPPORT 2024 T3 40 x 35 x 1.6 63,000
207 04 1 FRAME 13 2024 T3 120 x 50 x 0.5 63,000
207 03 1 FRAME 12 2024 T3 487 x 135 x 0.5 63,000
207 02 1 FRAME 11 2024 T3 233 x 151 x 0.5 63,000
207 01 2* FIN SUPPORT BRACKET 2024 T4 186 x 16 x 12 x 1.6 63,000 EXTRUSION
Reference Qty Description Material Cond Dimensions Resist. Comments
AVIONS COLOMBAN
CRICRI MC 15
TITLE : FRAMES 11, 12 AND 13 . DETAILS
Scale : 1/1
Drawn by : Colomban
Date : May 1981
Copyright © 1976 Michel COLOMBAN
This sheet is one of a set for the CRICRI MC 15 airplane intended for use by an amateur builder holding a valid license for construction of a single example of this aircraft. Any other use of this plan, in whole or in part, will be deemed fraudulent.
207

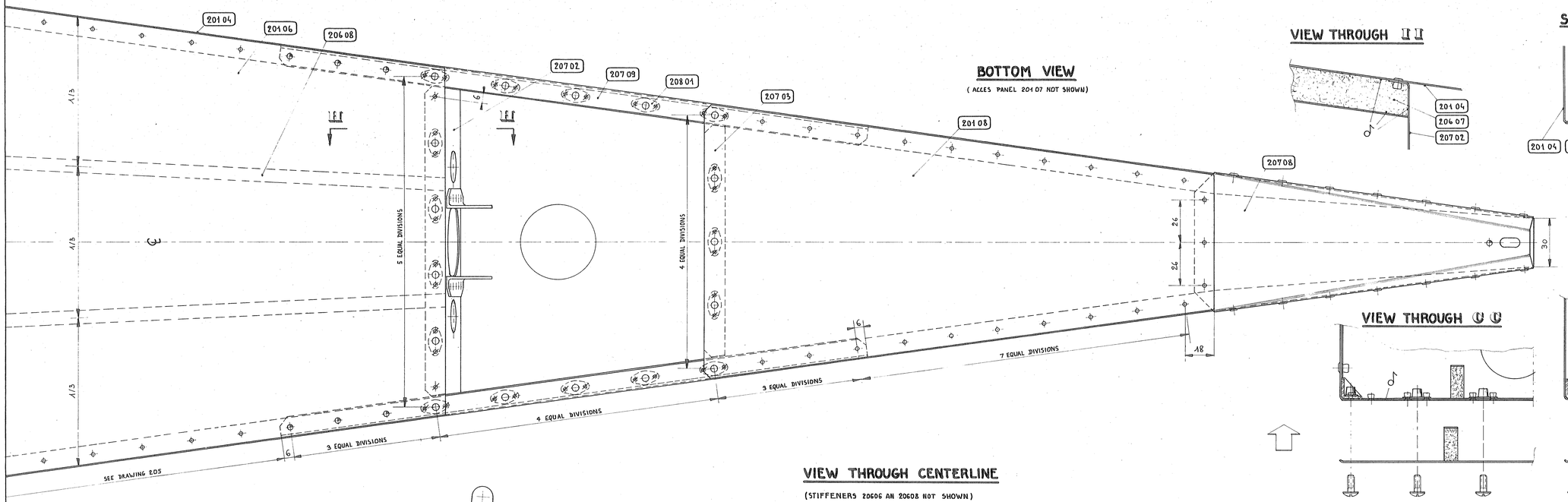





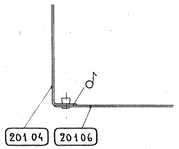


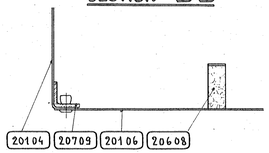





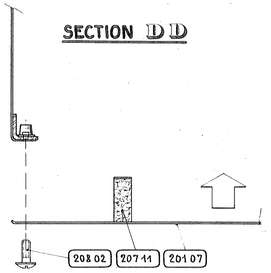


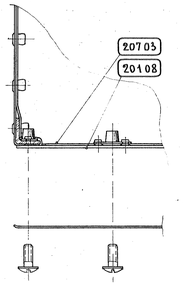


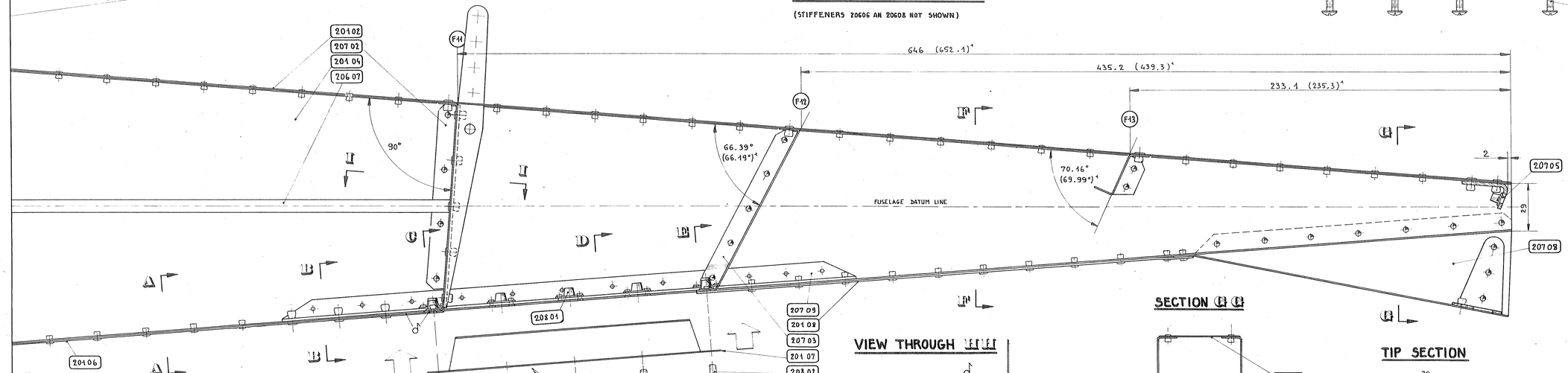


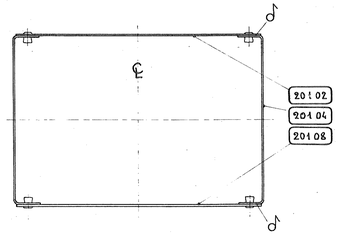


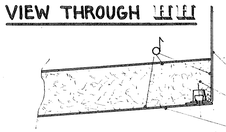


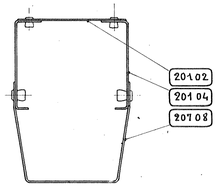


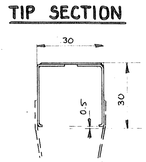


BONDING :
- FUSELAGE CORNER ANGLE
- STIFFENERS ON EDGES AND ENDS
- SKIN TO LOWER FLANGE OF FRAME 11

(1) THE DIMENSIONS AND ANGLES IN PARENTHSIS ARE TO BE USED ON THE ACTUAL FUSELAGE SIDE SKINS . THE OTHERS ARE PROJECTED ON THE SYMMETRY ( SAME FOR DRAWINGS 200 AND 205 ), HENCE THE DIFFERENCE.

| Reference | Qty | Description | Material | Cond | Dimensions | Resist. | Comments |
|---|---|---|---|---|---|---|---|
| 208 02 | 47 | SCREW | STEEL | | ROUND HD. Ø 4x40 | 150.000 | |
| 208 01 | 47 | ANCHOR NUT | STEEL | | REDUCED Ø 4 150 | 120.000 | |

AVIONS COLOMBAN

CRICRI MC 15

TITLE : FUSELAGE _ AFT PORTION _ ASSEMBLY

Scale : 1/1

Drawn by : Colomban
Date : May 1981

Copyright © 1976 Michel COLOMBAN
This sheet is one of a set for the CRICRI MC 15 airplane intended for use by an amateur builder holding a valid license for construction of a single example of this aircraft. Any other use of this plan, in whole or in part, will be deemed fraudulent.

208

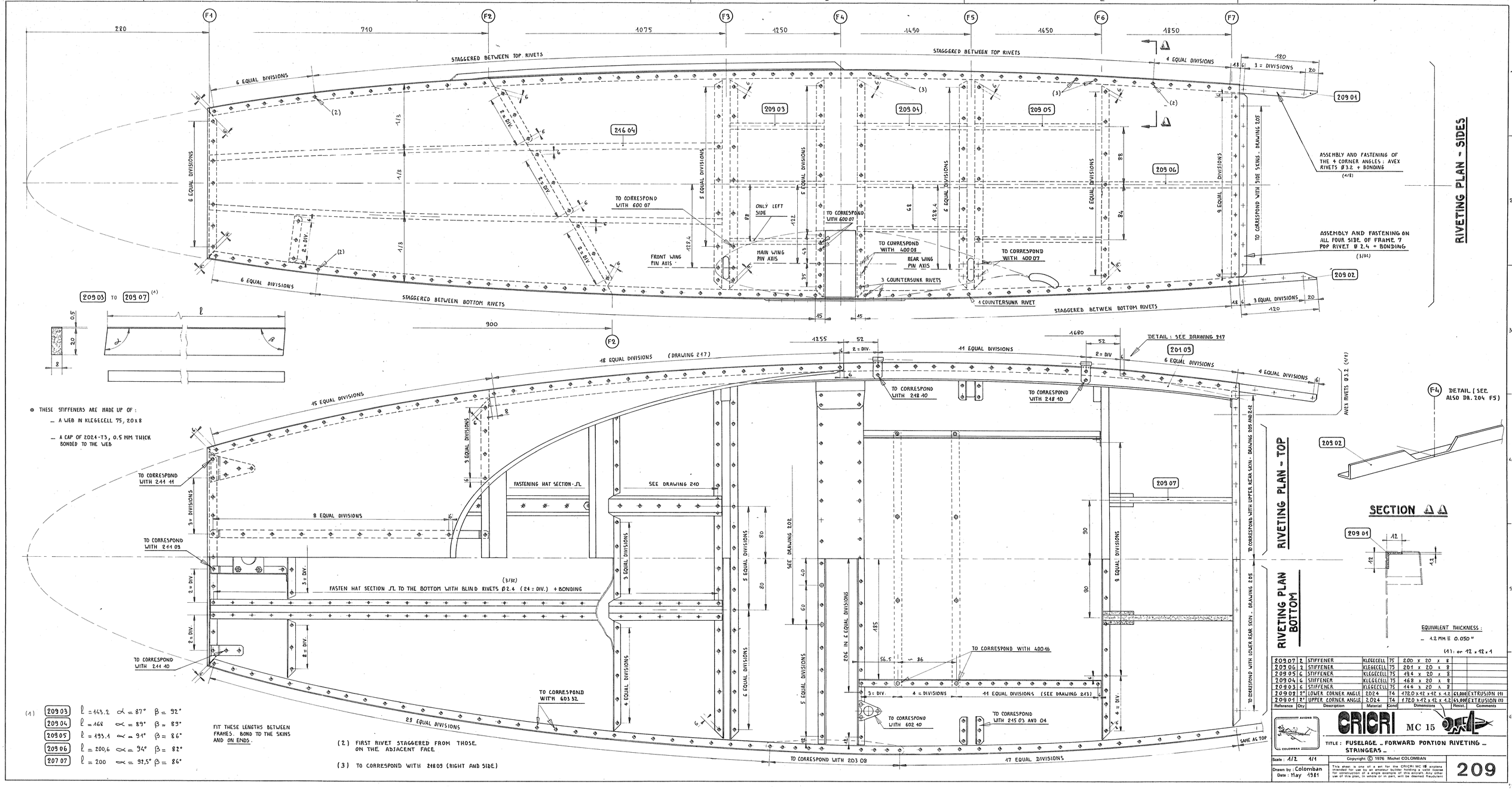


| Reference | Qty | Description | Material | Cond | Dimensions | Resist. | Comments |
|---|---|---|---|---|---|---|---|
| 209 07 | 2 | STIFFENER | KLEGECELL 75 | | 200 x 20 x 8 | | |
| 209 06 | 2 | STIFFENER | KLEGECELL 75 | | 201 x 20 x 8 | | |
| 209 05 | 6 | STIFFENER | KLEGECELL 75 | | 194 x 20 x 8 | | |
| 209 04 | 6 | STIFFENER | KLEGECELL 75 | | 162 x 20 x 8 | | |
| 209 03 | 6 | STIFFENER | KLEGECELL 75 | | 144 x 20 x 8 | | |
| 209 02 | 2* | LOWER CORNER ANGLE | 2024 | T4 | 472.0 x 12 x 12 x 4.2 | 63.000 | EXTRUSION (4) |
| 209 01 | 2* | UPPER CORNER ANGLE | 2024 | T4 | 1780 x 12 x 12 x 4.2 | 63.000 | EXTRUSION (4) |

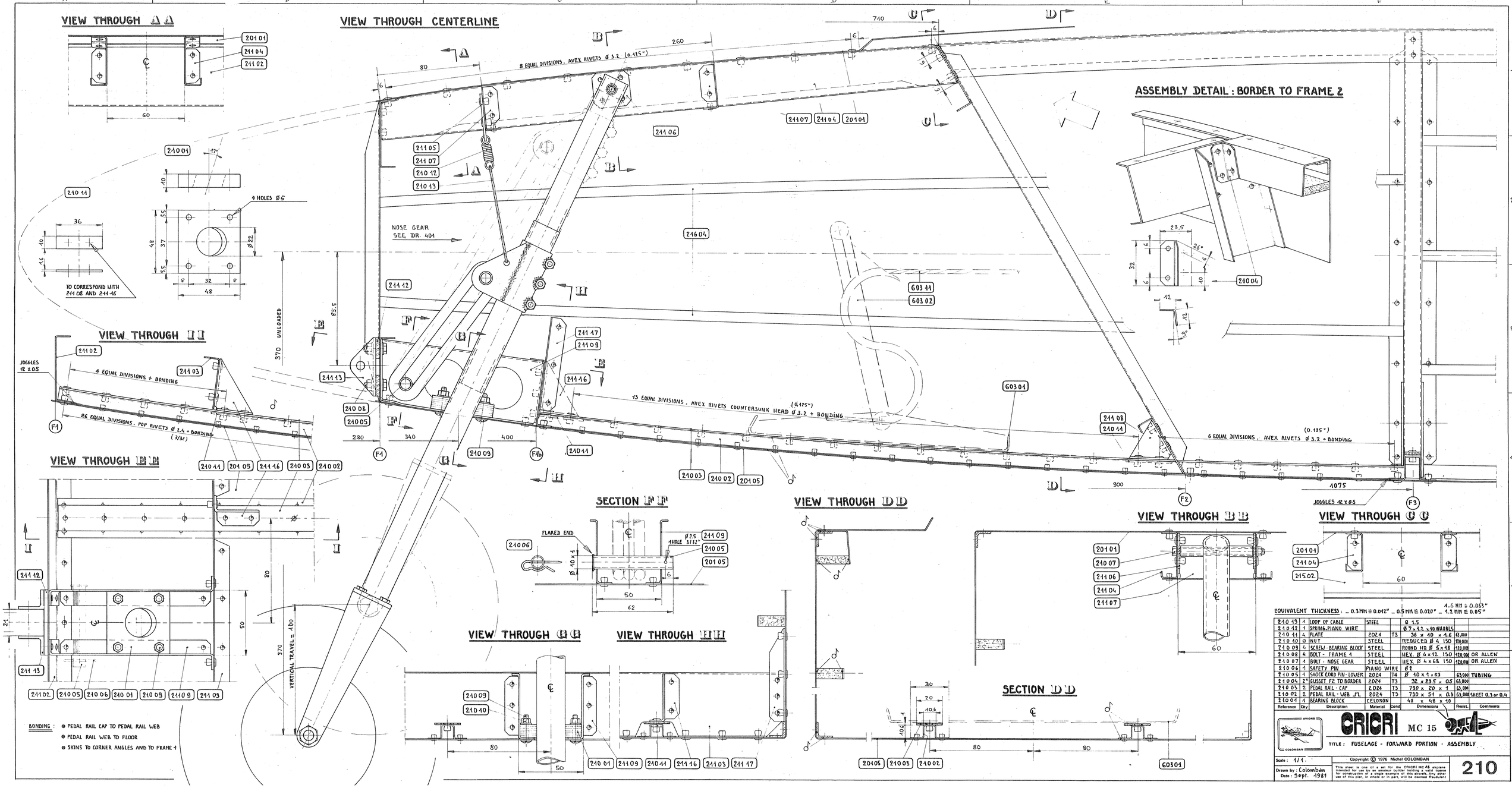
VIEW THROUGH A A
VIEW THROUGH CENTERLINE
ASSEMBLY DETAIL : BORDER TO FRAME 2
VIEW THROUGH I I
VIEW THROUGH E E
SECTION F F
VIEW THROUGH D D
VIEW THROUGH B B
VIEW THROUGH C C
VIEW THROUGH G G
VIEW THROUGH H H
SECTION D D
8 EQUAL DIVISIONS . AVEX RIVETS ø 3.2 (0.125")
13 EQUAL DIVISIONS . AVEX RIVETS COUNTERSUNK HEAD ø 3.2 + BONDING
6 EQUAL DIVISIONS . AVEX RIVETS ø 3.2 + BONDING
4 EQUAL DIVISIONS + BONDING
26 EQUAL DIVISIONS . POP RIVETS ø 2.4 + BONDING
4 HOLES Ø6
TO CORRESPOND WITH 241 08 AND 241 16
NOSE GEAR SEE DR. 401
370 UNLOADED
VERTICAL TRAVEL = 100
JOGGLES 12 X 0.5
FLARED END
Ø25 1HOLE 3/32"
BONDING :
● PEDAL RAIL CAP TO PEDAL RAIL WEB
● PEDAL RAIL WEB TO FLOOR
● SKINS TO CORNER ANGLES AND TO FRAME 1
EQUIVALENT THICKNESS : _ 0.3 MM ≅ 0.012" _ 0.5 MM ≅ 0.020" _ 1.6 MM ≅ 0.063" _ 1.2 MM ≅ 0.05"
Reference | Qty | Description | Material | Cond | Dimensions | Resist. | Comments
210 43 | 1 | LOOP OF CABLE | STEEL | | ø 1.5 |
210 42 | 1 | SPRING, PIANO WIRE | | | ø 7 x 4.2 x 10 WHORLS |
210 41 | 4 | PLATE | 2024 | T3 | 36 x 40 x 1.6 | 63,000
210 40 | 9 | NUT | STEEL | | REDUCED ø 4 150 | 110,000
210 09 | 4 | SCREW - BEARING BLOCK | STEEL | | ROUND HD ø 6 x 18 | 110,000
210 08 | 4 | BOLT - FRAME 1 | STEEL | | HEX. ø 4 x 12. 150 | 110,000 | OR ALLEN
210 07 | 1 | BOLT - NOSE GEAR | STEEL | | HEX. ø 4 x 68 150 | 110,000 | OR ALLEN
210 06 | 1 | SAFETY PIN | PIANO WIRE | | ø 2 |
210 05 | 4 | SHOCK CORD PIN - LOUVER | 2024 | T4 | ø 10 x 1 x 63 | 63,000 | TUBING
210 04 | 2* | GUSSET F2 TO BORDER | 2024 | T3 | 32 x 23.5 x 0.5 | 63,000
210 03 | 2 | PEDAL RAIL - CAP | 2024 | T3 | 750 x 20 x 1 | 63,000
210 02 | 2 | PEDAL RAIL - WEB ⊥L | 2024 | T3 | 750 x 51 x 0.3 | 63,000 | SHEET 0.3 or 0.4
210 01 | 4 | BEARING BLOCK | CELORON | | 48 x 48 x 10
AVIONS COLOMBAN
CRICRI MC 15
TITLE : FUSELAGE - FORWARD PORTION - ASSEMBLY
Scale : 1/1
Drawn by : Colomban
Date : Sept. 1981
Copyright © 1976 Michel COLOMBAN
This sheet is one of a set for the CRICRI MC 15 airplane intended for use by an amateur builder holding a valid license for construction of a single example of this aircraft. Any other use of this plan, in whole or in part, will be deemed Piracy.
210

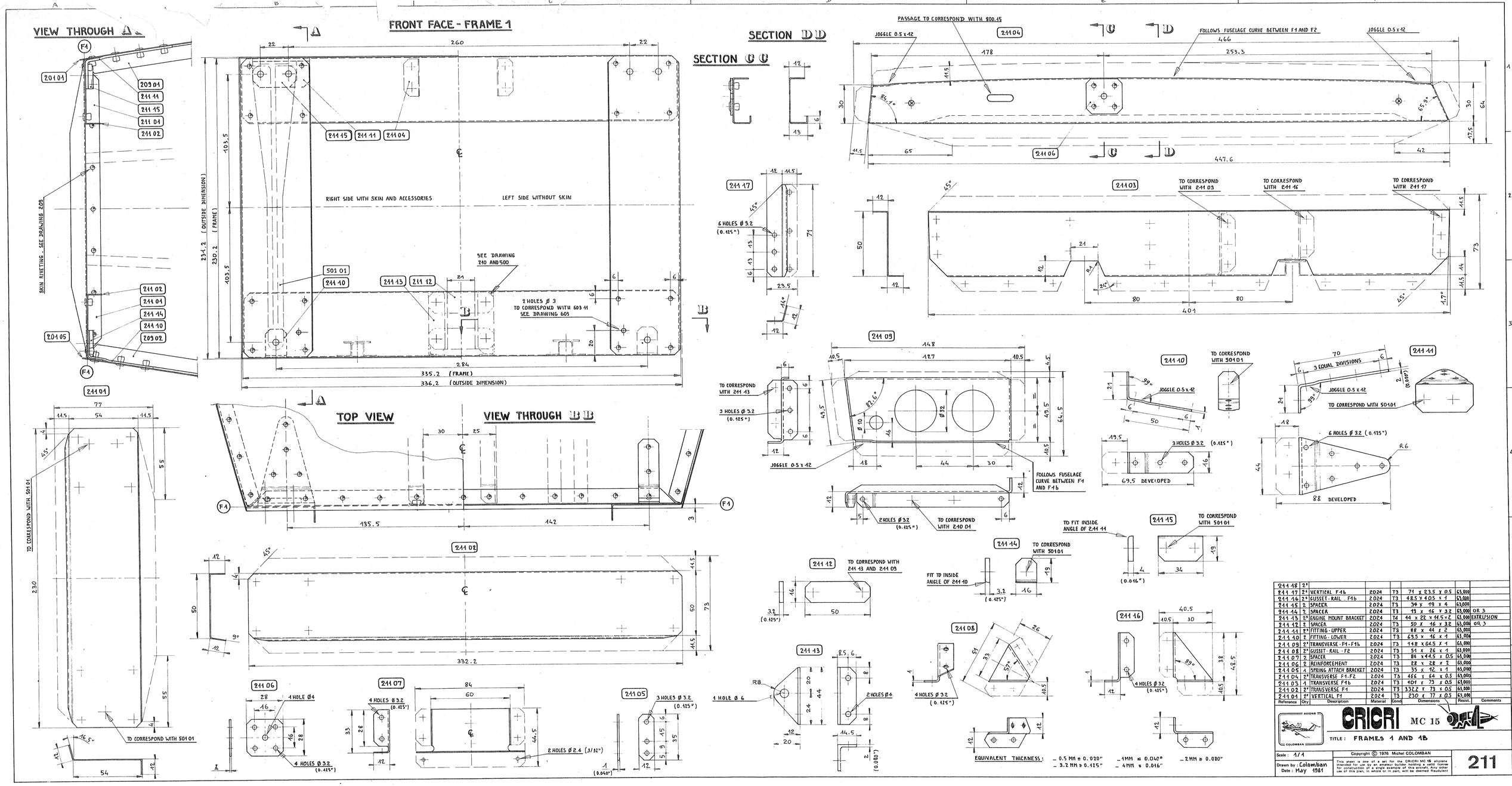


| Reference | Qty | Description | Material | Cond | Dimensions | Resist. | Comments |
|---|---|---|---|---|---|---|---|
| 211 18 | 2* | | | | | | |
| 211 17 | 2* | VERTICAL F4b | 2024 | T3 | 71 x 23.5 x 0.5 | 63,000 | |
| 211 16 | 2* | GUSSET-RAIL F4b | 2024 | T3 | 48.5 x 40.5 x 1 | 63,000 | |
| 211 15 | 2 | SPACER | 2024 | T3 | 34 x 19 x 4 | 63,000 | |
| 211 14 | 2 | SPACER | 2024 | T3 | 19 x 16 x 3.2 | 63,000 | OR 3 |
| 211 13 | 2* | ENGINE MOUNT BRACKET | 2024 | T4 | 44 x 22 x 44.5 x 2 | 63,000 | EXTRUSION |
| 211 12 | 2 | SPACER | 2024 | T3 | 50 x 16 x 3.2 | 63,000 | OR 3 |
| 211 11 | 2* | FITTING-UPPER | 2024 | T3 | 88 x 44 x 2 | 63,000 | |
| 211 10 | 2 | FITTING-LOWER | 2024 | T3 | 69.5 x 16 x 1 | 63,000 | |
| 211 09 | 2* | TRANSVERSE-F1-F1b | 2024 | T3 | 148 x 64.5 x 1 | 63,000 | |
| 211 08 | 2* | GUSSET-RAIL-F2 | 2024 | T3 | 51 x 26 x 1 | 63,000 | |
| 211 07 | 2 | SPACER | 2024 | T3 | 84 x 44.5 x 0.5 | 63,000 | |
| 211 06 | 2 | REINFORCEMENT | 2024 | T3 | 28 x 28 x 2 | 63,000 | |
| 211 05 | 4 | SPRING ATTACH BRACKET | 2024 | T3 | 35 x 12 x 1 | 63,000 | |
| 211 04 | 2* | TRANSVERSE F1-F2 | 2024 | T3 | 466 x 64 x 0.5 | 63,000 | |
| 211 03 | 1 | TRANSVERSE F4b | 2024 | T3 | 401 x 73 x 0.5 | 63,000 | |
| 211 02 | 2* | TRANSVERSE F1 | 2024 | T3 | 332.2 x 73 x 0.5 | 63,000 | |
| 211 01 | 2* | VERTICAL F1 | 2024 | T3 | 230 x 77 x 0.5 | 63,000 | |

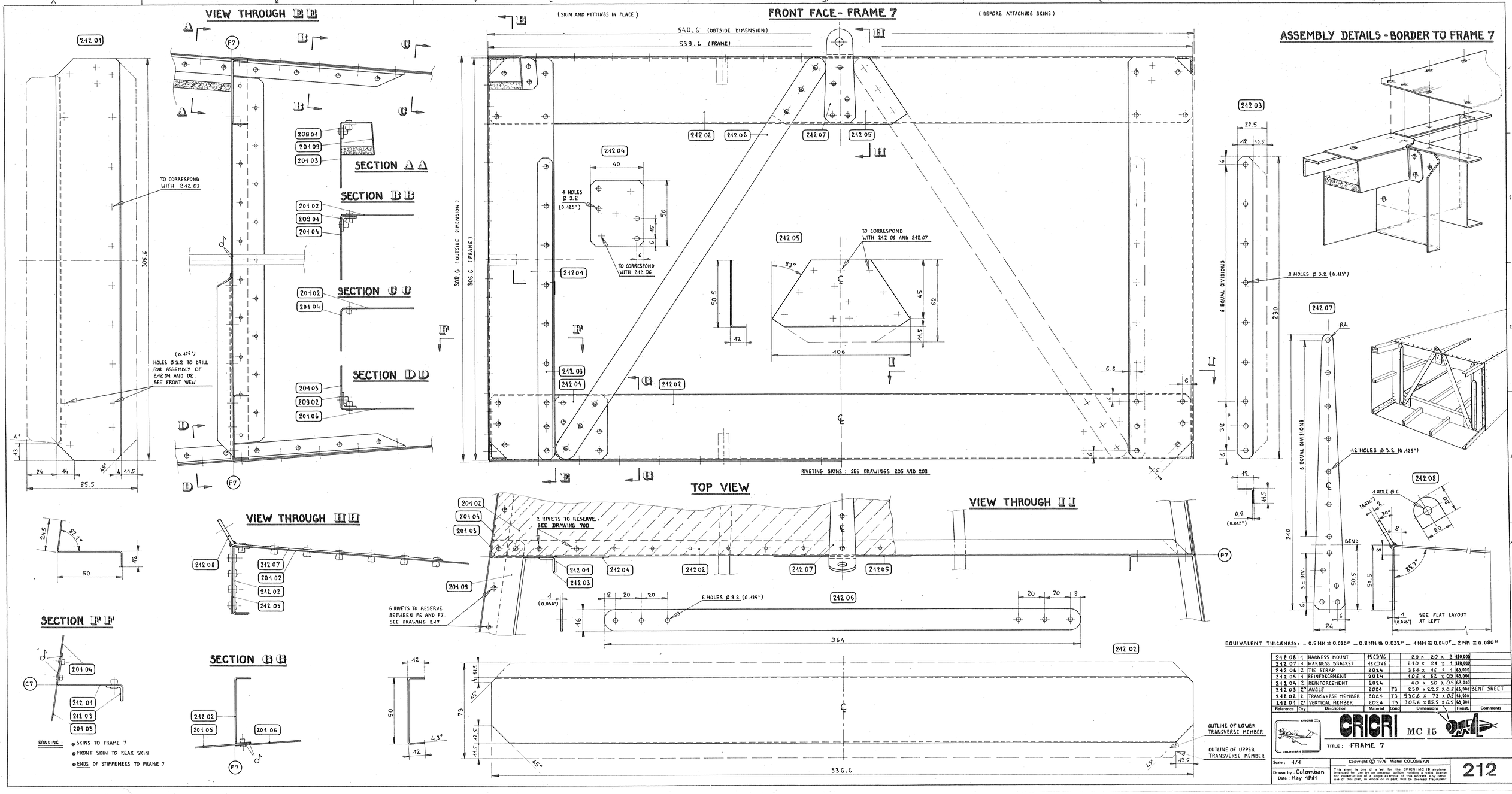


| Reference | Qty | Description | Material | Cond | Dimensions | Resist. | Comments |
|---|---|---|---|---|---|---|---|
| 212 08 | 1 | HARNESS MOUNT | 15CDV6 | | 20 x 20 x 2 | 130,000 | |
| 212 07 | 1 | HARNESS BRACKET | 15CDV6 | | 210 x 24 x 1 | 130,000 | |
| 212 06 | 2 | TIE STRAP | 2024 | | 364 x 16 x 1 | 63,000 | |
| 212 05 | 1 | REINFORCEMENT | 2024 | | 106 x 62 x 0.5 | 63,000 | |
| 212 04 | 2 | REINFORCEMENT | 2024 | | 40 x 50 x 0.5 | 63,000 | |
| 212 03 | 2* | ANGLE | 2024 | T3 | 230 x 22.5 x 0.8 | 65,000 | BENT SHEET |
| 212 02 | 2 | TRANSVERSE MEMBER | 2024 | T3 | 536.6 x 73 x 0.5 | 65,000 | |
| 212 01 | 2* | VERTICAL MEMBER | 2024 | T3 | 306.6 x 85.5 x 0.5 | 65,000 | |

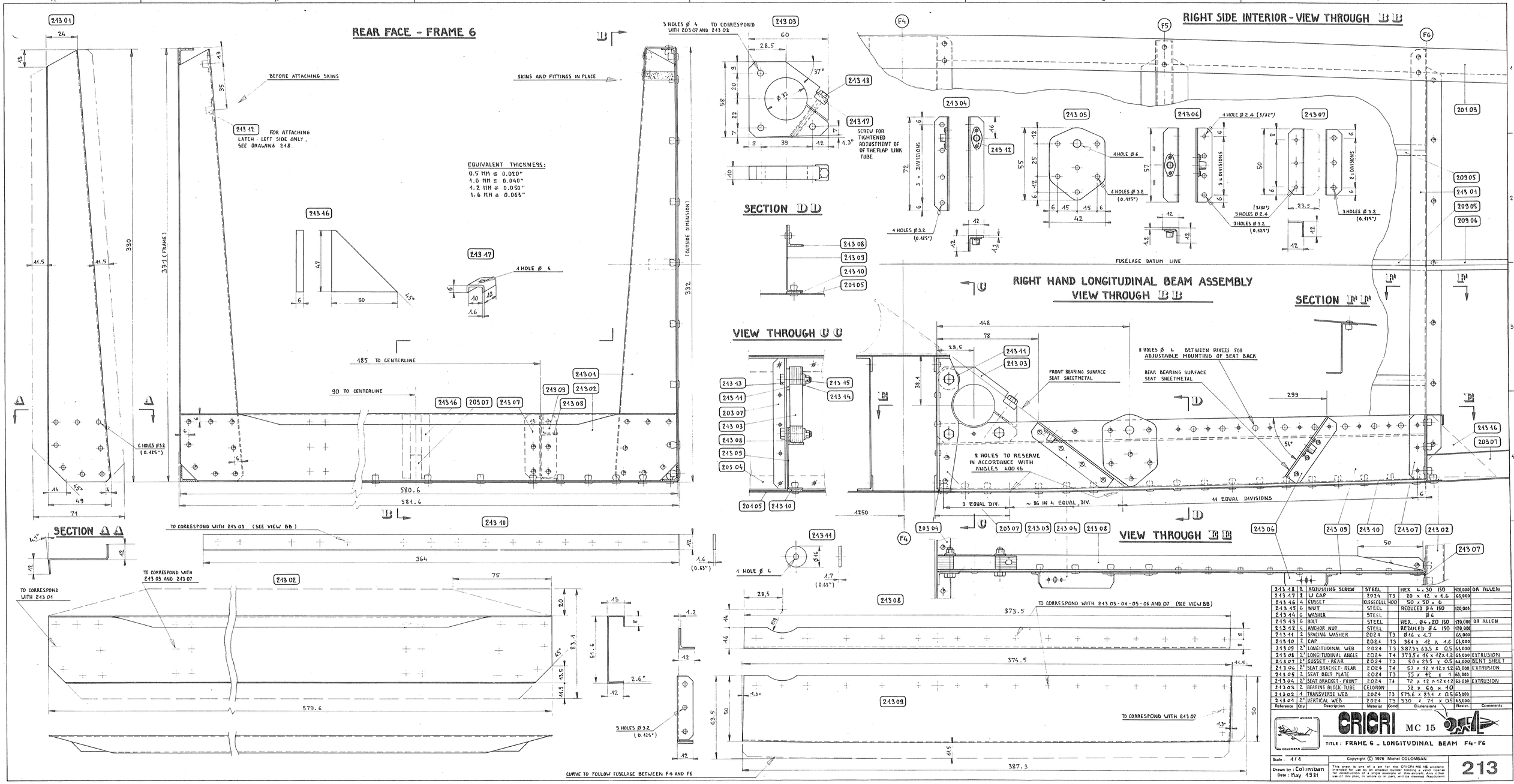


| Reference | Qty | Description | Material | Cond | Dimensions | Resist. | Comments |
|---|---|---|---|---|---|---|---|
| 213 18 | 2 | ADJUSTING SCREW | STEEL | | HEX 4 x 30 ISO | 120.000 | OR ALLEN |
| 213 17 | 2 | LJ CAP | 2024 | T3 | 10 x 12 x 1.6 | 65.000 | |
| 213 16 | 4 | GUSSET | KLEGECELL | 400 | 50 x 50 x 6 | | |
| 213 15 | 6 | NUT | STEEL | | REDUCED Ø 4 ISO | 120.000 | |
| 213 14 | 6 | WASHER | STEEL | | Ø 4 | | |
| 213 13 | 6 | BOLT | STEEL | | HEX. Ø 4 x 20 ISO | 120.000 | OR ALLEN |
| 213 12 | 4 | ANCHOR NUT | STEEL | | REDUCED Ø 4 ISO | 120.000 | |
| 213 11 | 2 | SPACING WASHER | 2024 | T3 | Ø 16 x 4.7 | 65.000 | |
| 213 10 | 2 | CAP | 2024 | T3 | 364 x 12 x 1.6 | 65.000 | |
| 213 09 | 2* | LONGITUDINAL WEB | 2024 | T3 | 387.3 x 63.5 x 0.5 | 65.000 | |
| 213 08 | 2* | LONGITUDINAL ANGLE | 2024 | T4 | 373.5 x 16 x 12 x 1.2 | 65.000 | EXTRUSION |
| 213 07 | 2* | GUSSET - REAR | 2024 | T3 | 50 x 23.5 x 0.5 | 65.000 | BENT SHEET |
| 213 06 | 2* | SEAT BRACKET - REAR | 2024 | T4 | 57 x 12 x 12 x 1.2 | 65.000 | EXTRUSION |
| 213 05 | 2 | SEAT BELT PLATE | 2024 | T3 | 55 x 42 x 1 | 65.000 | |
| 213 04 | 2* | SEAT BRACKET - FRONT | 2024 | T4 | 72 x 12 x 12 x 1.2 | 65.000 | EXTRUSION |
| 213 03 | 2 | BEARING BLOCK TUBE | CELORON | | 58 x 60 x 40 | | |
| 213 02 | 4 | TRANSVERSE WEB | 2024 | T3 | 575.6 x 83.1 x 0.5 | 65.000 | |
| 213 01 | 2* | VERTICAL WEB | 2024 | T3 | 330 x 71 x 0.5 | 65.000 | |

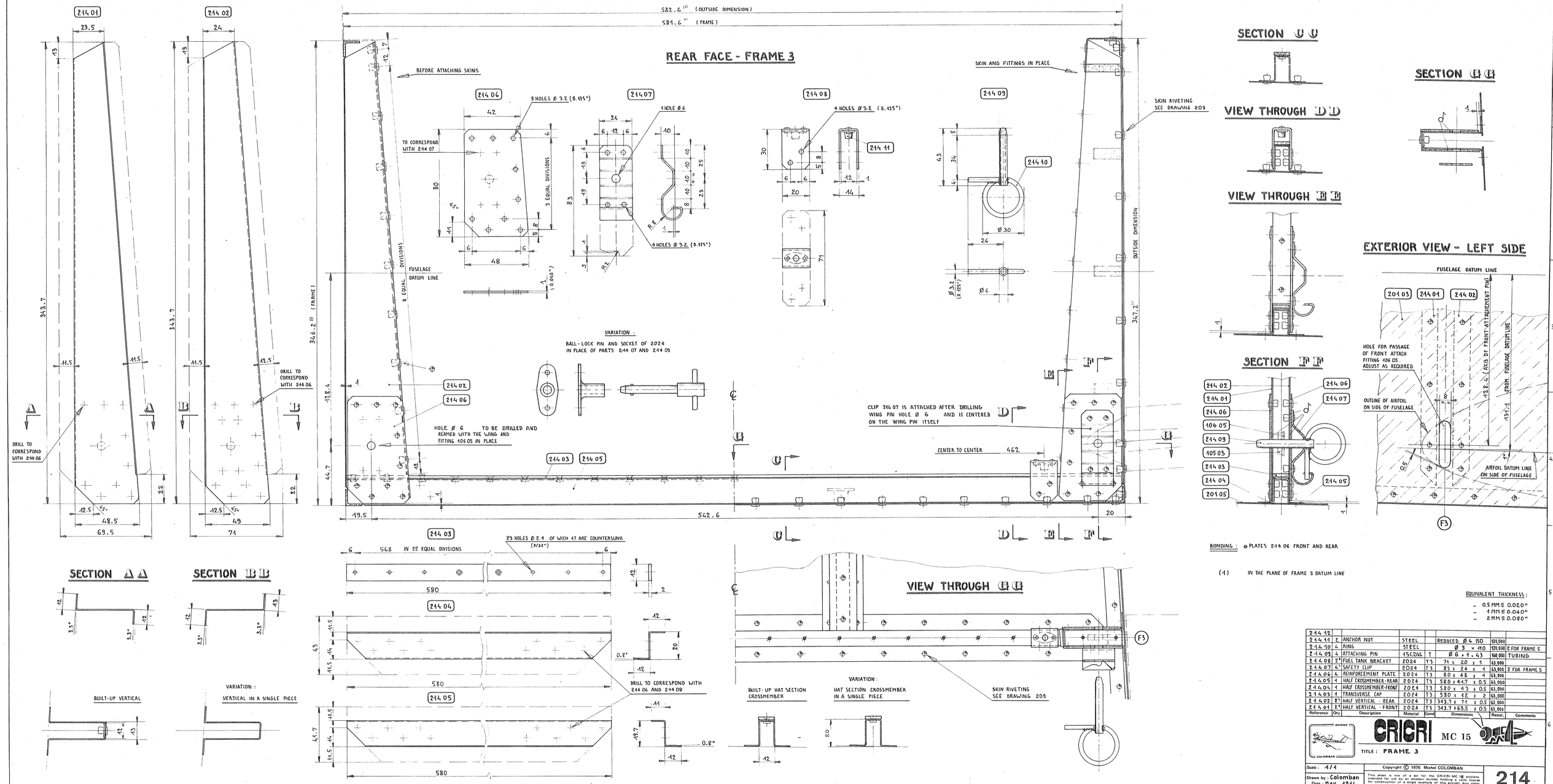
REAR FACE - FRAME 3
582.6 (1) (OUTSIDE DIMENSION)
581.6 (1) (FRAME)
BEFORE ATTACHING SKINS
SKIN AND FITTINGS IN PLACE
SKIN RIVETING SEE DRAWING 209
OUTSIDE DIMENSION
346.2 (1) (FRAME)
347.2 (1)
FUSELAGE DATUM LINE
8 EQUAL DIVISIONS
3 EQUAL DIVISIONS
TO CORRESPOND WITH 214 07
3 HOLES Ø 3.2 (0.125")
4 HOLE Ø 6
4 HOLES Ø 3.2 (0.125")
4 HOLES Ø 3.2 (0.125")
VARIATION :
BALL-LOCK PIN AND SOCKET OF 2024 IN PLACE OF PARTS 214 07 AND 214 09
HOLE Ø 6 TO BE DRILLED AND REAMED WITH THE WING AND FITTING 106 05 IN PLACE
CLIP 214 07 IS ATTACHED AFTER DRILLING WING PIN HOLE Ø 6 AND IS CENTERED ON THE WING PIN ITSELF
CENTER TO CENTER 462
542.6
343.7
DRILL TO CORRESPOND WITH 214 06
DRILL TO CORRESPOND WITH 214 06
SECTION A A
SECTION B B
BUILT-UP VERTICAL
VARIATION :
VERTICAL IN A SINGLE PIECE
568 IN 22 EQUAL DIVISIONS
23 HOLES Ø 2.4 OF WICH 17 ARE COUNTERSUNK (3/32")
580
DRILL TO CORRESPOND WITH 214 06 AND 214 02
VIEW THROUGH C C
VARIATION :
BUILT-UP HAT SECTION CROSSMEMBER
HAT SECTION CROSSMEMBER IN A SINGLE PIECE
SKIN RIVETING SEE DRAWING 209
SECTION U U
VIEW THROUGH D D
VIEW THROUGH E E
SECTION F F
SECTION G G
EXTERIOR VIEW - LEFT SIDE
FUSELAGE DATUM LINE
HOLE FOR PASSAGE OF FRONT ATTACH FITTING 106 05. ADJUST AS REQUIRED
OUTLINE OF AIRFOIL ON SIDE OF FUSELAGE
AIRFOIL DATUM LINE ON SIDE OF FUSELAGE
128.4 (AXIS OF FRONT ATTACHEMENT PIN) FROM FUSELAGE DATUM LINE
BONDING : ● PLATES 214 06 FRONT AND REAR
(1) IN THE PLANE OF FRAME 3 DATUM LINE
EQUIVALENT THICKNESS :
- 0.5 MM ≅ 0.020"
- 1 MM ≅ 0.040"
- 2 MM ≅ 0.080"
214 12 | | ANCHOR NUT | STEEL | | REDUCED Ø 4 ISO | (10,000) |
214 11 | 2 | RING | STEEL | | Ø 3 × 11.0 | (120,000) | 2 FOR FRAME 5
214 10 | 4 | ATTACHING PIN | 15CDV6 | T | Ø 6 × 1.43 | (160,000) | TUBING
214 09 | 2* | FUEL TANK BRACKET | 2024 | T3 | 74 x 20 x 1 | 63,000 |
214 08 | 2* | SAFETY CLIP | 2024 | T3 | 83 x 24 x 1 | 63,000 | 2 FOR FRAME 5
214 07 | 4* | REINFORCEMENT PLATE | 2024 | T3 | 80 x 48 x 4 | 63,000 |
214 06 | 4 | HALF CROSSMEMBER-REAR | 2024 | T3 | 580 x 44.7 x 0.5 | 63,000 |
214 05 | 1 | HALF CROSSMEMBER-FRONT | 2024 | T3 | 580 x 43 x 0.5 | 63,000 |
214 04 | 1 | TRANSVERSE CAP | 2024 | T3 | 580 x 12 x 2 | 63,000 |
214 03 | 1 | HALF VERTICAL - REAR | 2024 | T3 | 343.7 x 74 x 0.5 | 63,000 |
214 02 | 2* | HALF VERTICAL - FRONT | 2024 | T3 | 343.7 x 69.5 x 0.5 | 63,000 |
214 01 | 2* | Reference | Qty | Description | Material | Cond | Dimensions | Resist. | Comments
CRICRI MC 15
TITLE : FRAME 3
Scale : 1/1
Drawn by : Colomban
Date : May 1981
Copyright © 1976 Michel COLOMBAN
This sheet is one of a set for the CRICRI MC 15 airplane intended for use by an amateur builder holding a valid license for construction of an aircraft based on the above. Any other use of this plan, in whole or in part, will be deemed fraudulent.
214

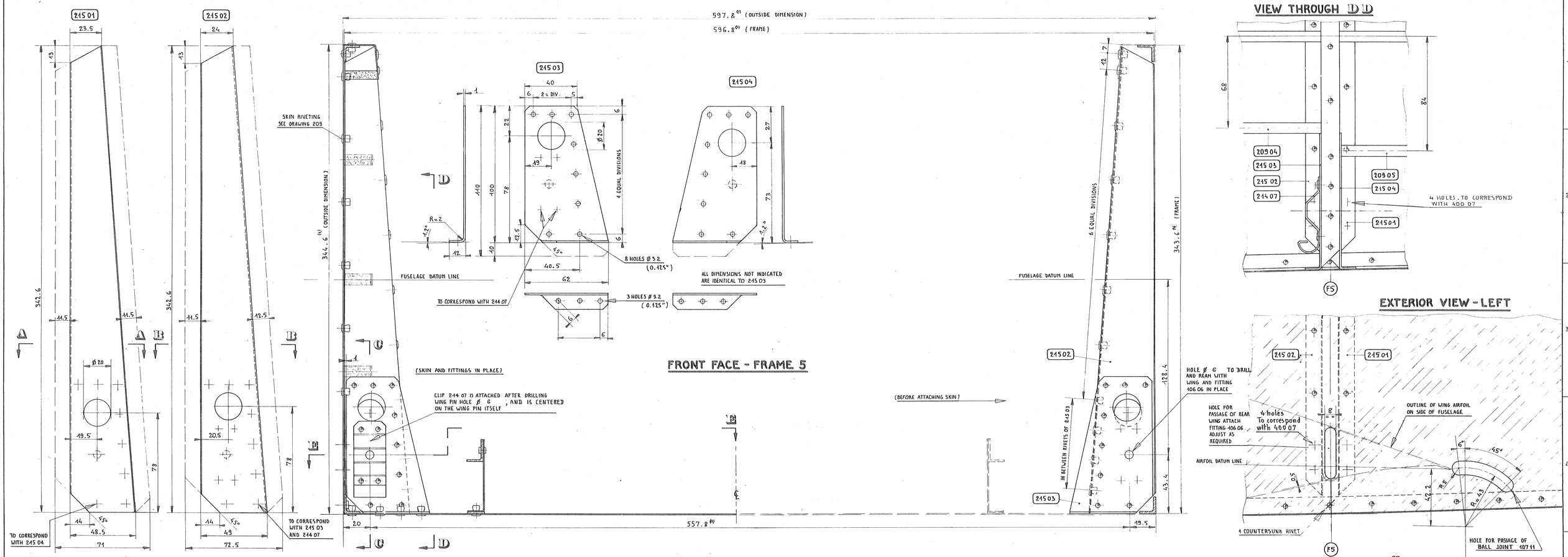


BONDING : ● PLATES 215 03 AND 215 04 , AT LEAST IN LINE WITH HOLES TO BE DRILLED LATER FOR CLIP 214 07 AND PIN Ø G

EQUIVALENT THICKNESS :
- 0.5 MM ≅ 0.020"
- 1 MM ≅ 0.040"
- 2 MM ≅ 0.080"

| Reference | Qty | Description | Material | Cond | Dimensions | Resist. | Comments |
|---|---|---|---|---|---|---|---|
| 215 07 | | | | | | | |
| 215 06 | 2 | | | | | | |
| 215 05 | 2* | | | | | | |
| 215 04 | 2* | REINFORCEMENT PLATE-REAR | 2024 | T3 | 110 x 62 x 1 | 63,000 | |
| 215 03 | 2* | REINFORCEMENT PLATE-FRONT | 2024 | T3 | 110 x 62 x 1 | 63,000 | |
| 215 02 | 2* | HALF VERTICAL - FRONT | 2024 | T3 | 342.6 x 72.5 x 0.5 | 63,000 | |
| 215 01 | 2* | HALF VERTICAL - REAR | 2024 | T3 | 342.6 x 71 x 0.5 | 63,000 | |

AVIONS COLOMBAN — CRICRI MC 15

TITLE : FRAME 5

Scale : 1/1

Drawn by : Colomban
Date : Sept. 1984

Copyright © 1976 Michel COLOMBAN
This sheet is one of a set for the CRICRI MC 15 airplane intended for use by an amateur builder holding a valid license for construction of a single example of this aircraft. Further use of this plan, in whole or in part, will be deemed fraudulent.

215

# REAR FACE - FRAME 2

( HALF - SIZE )

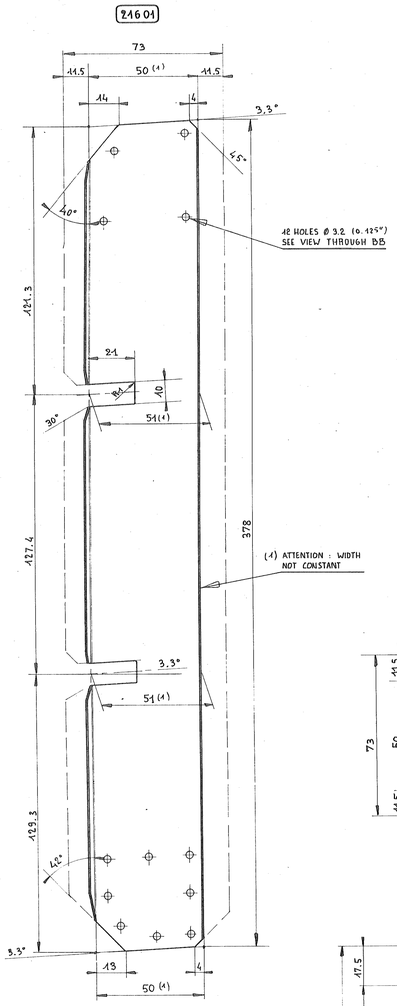


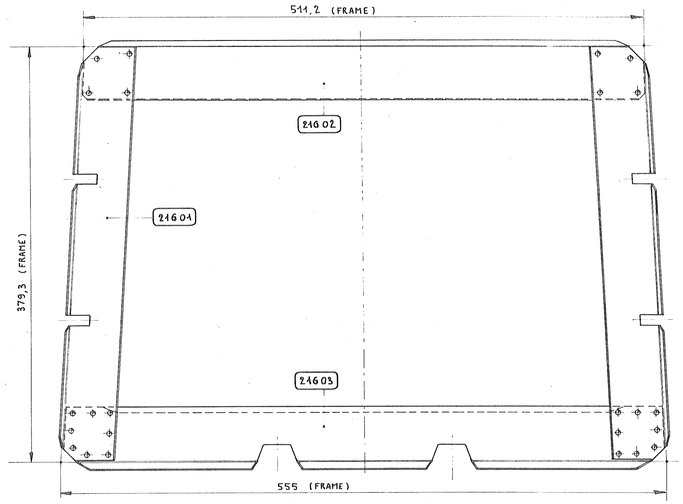


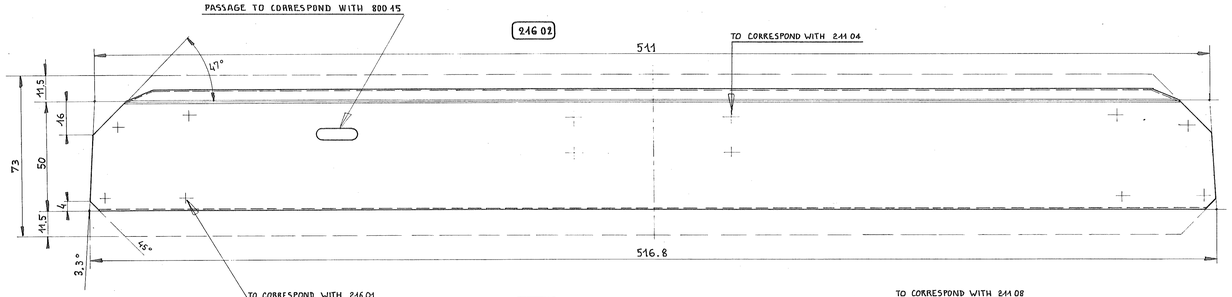


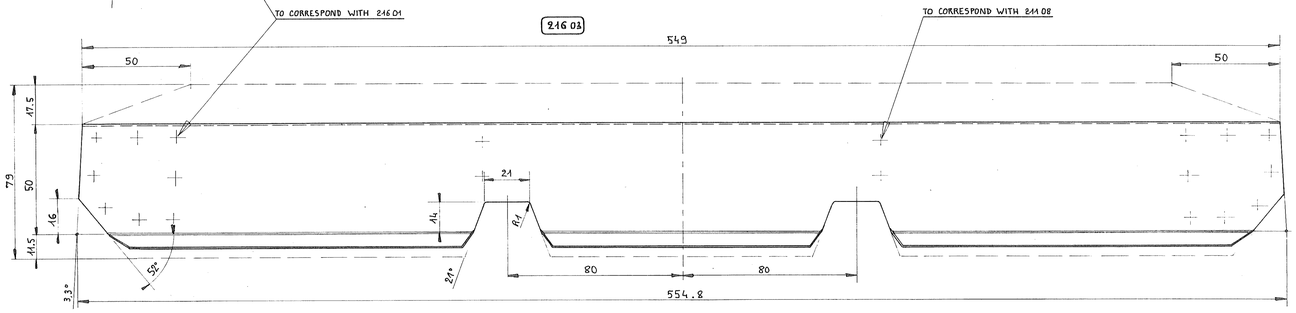


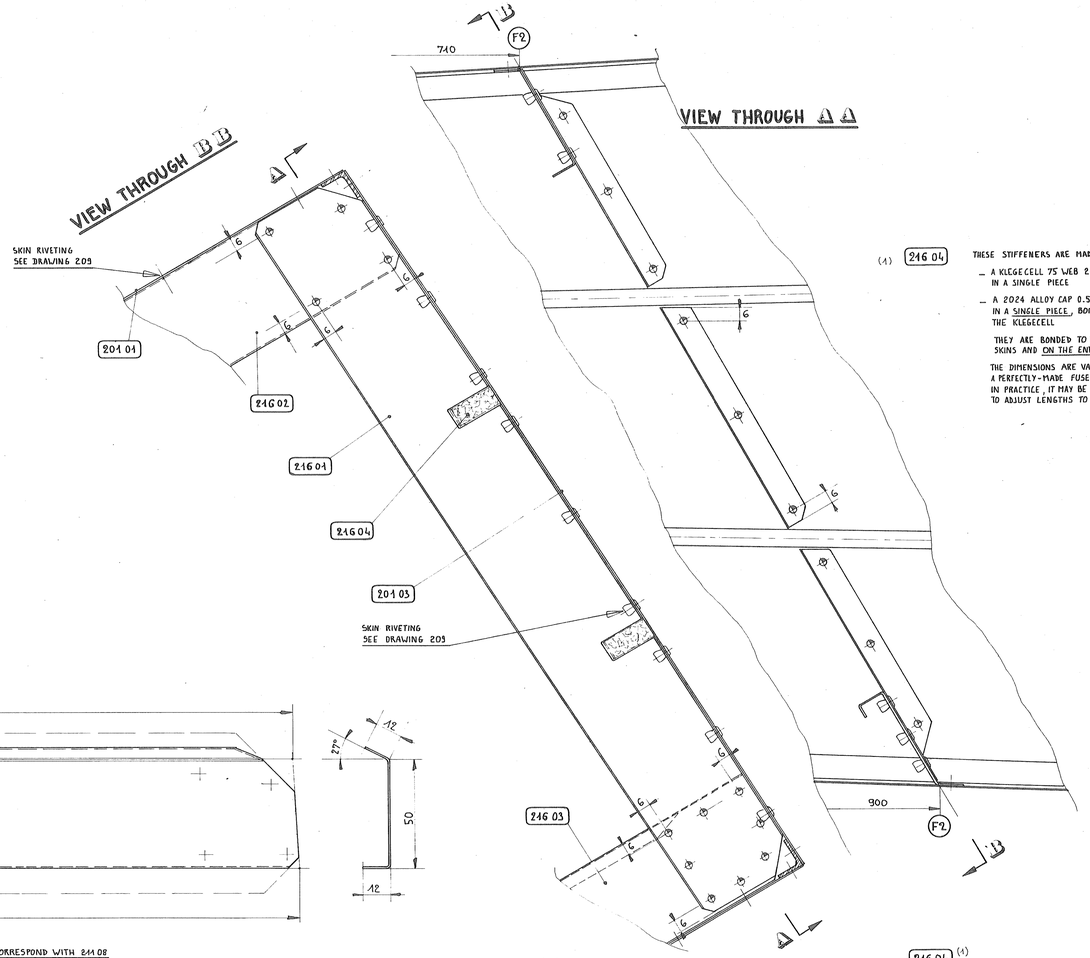


(1) 216 04 THESE STIFFENERS ARE MADE UP OF :

- A KLEGECELL 75 WEB 20 x 8 IN A SINGLE PIECE
- A 2024 ALLOY CAP 0.5 MM THICK IN A SINGLE PIECE, BONDED TO THE KLEGECELL

THEY ARE BONDED TO THE SKINS AND ON THE ENDS.

THE DIMENSIONS ARE VALID FOR A PERFECTLY-MADE FUSELAGE. IN PRACTICE, IT MAY BE NECESSARY TO ADJUST LENGTHS TO FIT.

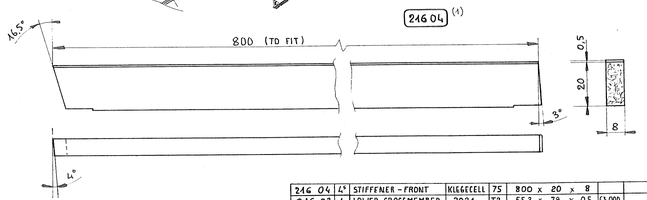


EQUIVALENT THICKNESS :

- 0.5 MM ≅ 0.020"

| Reference | Qty | Description | Material | Cond | Dimensions | Resist. | Comments |
|---|---|---|---|---|---|---|---|
| 216 04 | 4* | STIFFENER - FRONT | KLEGECELL | 75 | 800 x 20 x 8 | | |
| 216 03 | 1 | LOWER CROSSMEMBER | 2024 | T3 | 553 x 79 x 0.5 | 63,000 | |
| 216 02 | 1 | UPPER CROSSMEMBER | 2024 | T3 | 517 x 73 x 0.5 | 65,000 | |
| 216 01 | 2* | VERTICAL MEMBER | 2024 | T3 | 380 x 74 x 0.5 | 65,000 | |

AVIONS COLOMBAN — CRICRI MC 15

TITLE : FRAME 2 - FORWARD STIFFENERS

Scale : 1/1 1/2

Drawn by : Colomban

Date : May 1981

Copyright © 1976 Michel COLOMBAN

This sheet is one of a set for the CRICRI MC 15 airplane intended for use by an amateur builder holding a valid license issued by an aeronautical authority. Any other use, or any other use of this plan, in whole or in part, will be deemed fraudulent.

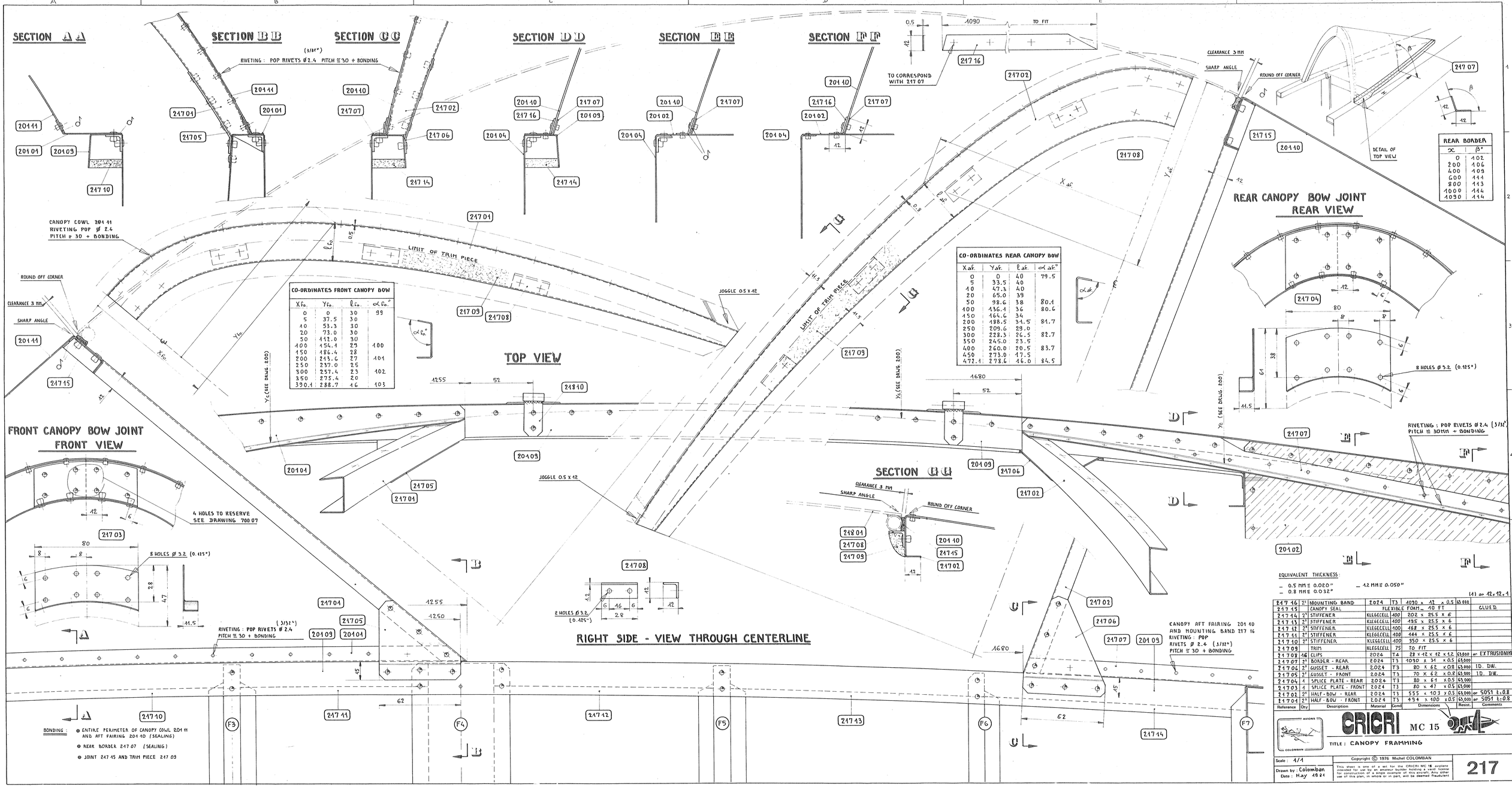
SECTION A A
SECTION B B
SECTION C C
SECTION D D
SECTION E E
SECTION F F
SECTION G G
RIVETING : POP RIVETS Ø 2.4 PITCH ≅ 30 + BONDING (3/32")
TO CORRESPOND WITH 217 07
TO FIT
CLEARANCE 3 MM
SHARP ANGLE
ROUND OFF CORNER
DETAIL OF TOP VIEW
REAR BORDER
x | β°
0 | 102
200 | 106
400 | 109
600 | 111
800 | 113
1000 | 114
1030 | 114
REAR CANOPY BOW JOINT
REAR VIEW
8 HOLES Ø 3.2 (0.125")
CANOPY COWL 201 11
RIVETING POP Ø 2.4
PITCH ≅ 30 + BONDING
LIMIT OF TRIM PIECE
JOGGLE 0.5 x 12
CO-ORDINATES FRONT CANOPY BOW
Xfo. | Yfo. | ℓfo. | αfo.°
0 | 0 | 30 | 99
5 | 37.5 | 30
10 | 53.3 | 30
20 | 73.0 | 30
50 | 112.0 | 30
100 | 154.4 | 29 | 100
150 | 186.4 | 28
200 | 213.6 | 27 | 101
250 | 237.0 | 25
300 | 257.4 | 23 | 102
350 | 275.4 | 20
390.1 | 288.7 | 16 | 103
CO-ORDINATES REAR CANOPY BOW
Xaf. | Yaf. | ℓaf. | αaf.°
0 | 0 | 40 | 79.5
5 | 33.5 | 40
10 | 47.3 | 40
20 | 65.0 | 39
50 | 98.6 | 38 | 80.1
100 | 136.1 | 36 | 80.6
150 | 164.6 | 34
200 | 188.5 | 31.5 | 81.7
250 | 209.6 | 29.0
300 | 228.3 | 26.5 | 82.7
350 | 245.0 | 23.5
400 | 260.0 | 20.5 | 83.7
450 | 273.0 | 17.5
472.1 | 278.6 | 16.0 | 84.5
TOP VIEW
FRONT CANOPY BOW JOINT
FRONT VIEW
4 HOLES TO RESERVE SEE DRAWING 700 07
8 HOLES Ø 3.2 (0.125")
RIVETING : POP RIVETS Ø 2.4 (3/32")
PITCH ≅ 30 + BONDING
2 HOLES Ø 3.2 (0.125")
RIGHT SIDE - VIEW THROUGH CENTERLINE
CANOPY AFT FAIRING 201 10 AND MOUNTING BAND 217 16
RIVETING : POP RIVETS Ø 2.4 (3/32")
PITCH ≅ 30 + BONDING
BONDING :
ENTIRE PERIMETER OF CANOPY COWL 201 11 AND AFT FAIRING 201 10 (SEALING)
REAR BORDER 217 07 (SEALING)
JOINT 217 15 AND TRIM PIECE 217 03
EQUIVALENT THICKNESS :
0.5 MM ≅ 0.020"
0.8 MM ≅ 0.032"
1.2 MM ≅ 0.050"
(1) or 12.1.1
Reference | Qty | Description | Material | Cond | Dimensions | Resist. | Comments
217 16 | 2* | MOUNTING BAND | 2024 | T3 | 1030 x 12 x 0.5 | 65 000
217 15 | | CANOPY SEAL | FLEXIBLE FOAM _ 40 FT | | | | GLUED
217 14 | 2* | STIFFENER | KLEGECELL 400 | | 202 x 25.5 x 6
217 13 | 2* | STIFFENER | KLEGECELL 400 | | 195 x 25.5 x 6
217 12 | 2* | STIFFENER | KLEGECELL 400 | | 168 x 25.5 x 6
217 11 | 2* | STIFFENER | KLEGECELL 400 | | 144 x 25.5 x 6
217 10 | 2* | STIFFENER | KLEGECELL 400 | | 350 x 25.5 x 6
217 09 | | TRIM | KLEGECELL | 75 | TO FIT
217 08 | 16 | CLIPS | 2024 | T4 | 28 x 12 x 12 x 1.2 | 65 000 | or EXTRUSION
217 07 | 2* | BORDER - REAR | 2024 | T3 | 1030 x 34 x 0.5 | 65 000
217 06 | 2* | GUSSET - REAR | 2024 | T3 | 80 x 62 x 0.8 | 65 000 | 1D. DW.
217 05 | 2* | GUSSET - FRONT | 2024 | T3 | 70 x 62 x 0.8 | 65 000 | 1D. DW.
217 04 | 4 | SPLICE PLATE - REAR | 2024 | T3 | 80 x 64 x 0.5 | 65 000
217 03 | 4 | SPLICE PLATE - FRONT | 2024 | T3 | 80 x 47 x 0.5 | 65 000
217 02 | 2* | HALF - BOW - REAR | 2024 | T3 | 555 x 103 x 0.5 | 65 000 | or 5051 t=0.8
217 01 | 2* | HALF - BOW - FRONT | 2024 | T3 | 494 x 100 x 0.5 | 65 000 | or 5051 t=0.8
AVIONS COLOMBAN
CRICRI MC 15
TITLE : CANOPY FRAMMING
Scale : 1/1
Drawn by : Colomban
Date : May 1974
Copyright © 1976 Michel COLOMBAN
This sheet is one of a set for the CRICRI MC 15 aeroplane intended for use by an amateur-builder holding a valid license for construction of a single example of this aircraft. Any other use of this plan, in whole or in part, will be deemed fraudulent
217

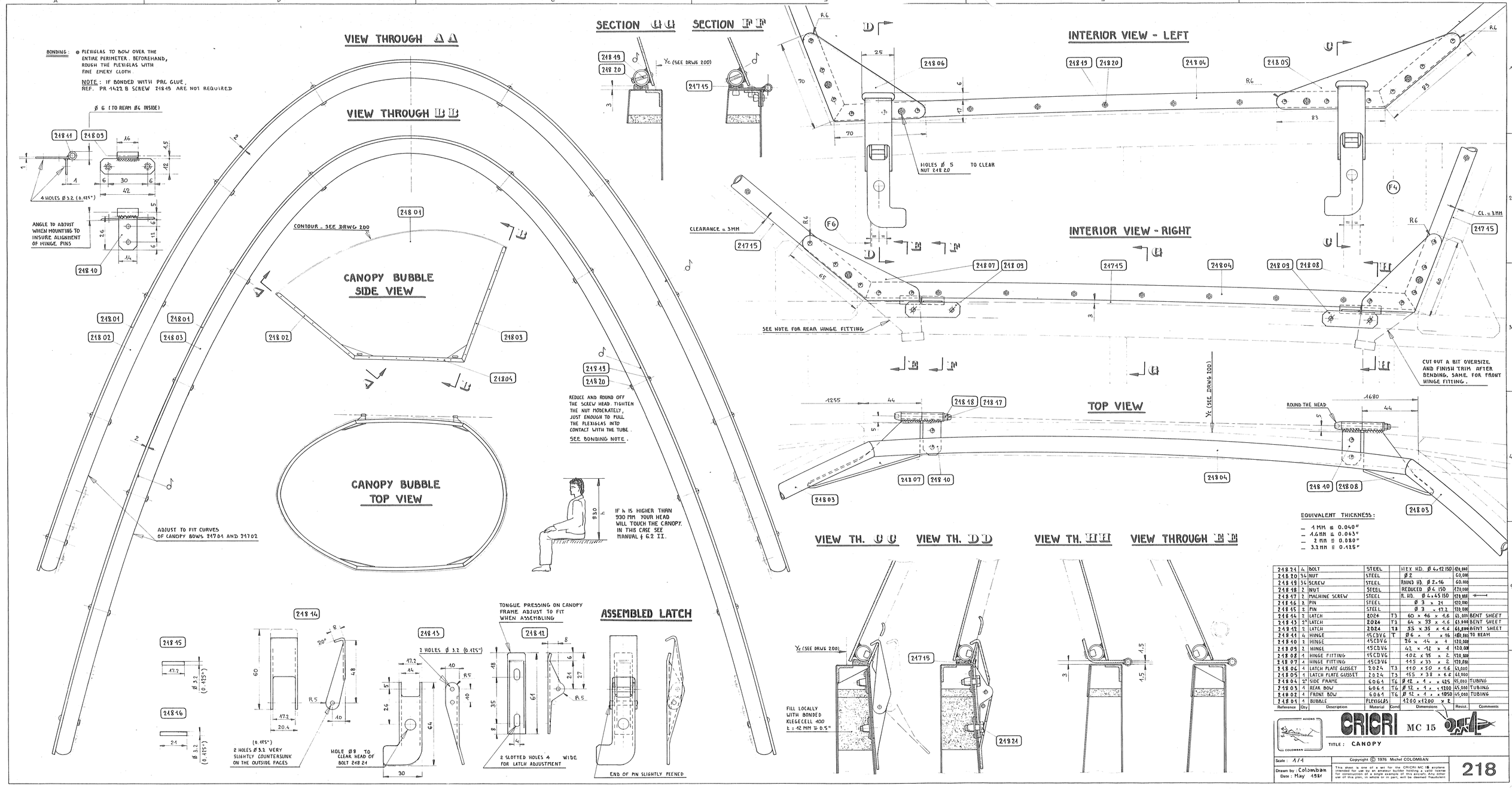


EQUIVALENT THICKNESS :

- 1 MM ≅ 0.040"
- 1.6 MM ≅ 0.063"
- 2 MM ≅ 0.080"
- 3.2 MM ≅ 0.125"

| Reference | Qty | Description | Material | Cond | Dimensions | Resist. | Comments |
|---|---|---|---|---|---|---|---|
| 24824 | 4 | BOLT | STEEL | | HEX HD. Ø 4.42 ISO | 120.000 | |
| 24820 | 34 | NUT | STEEL | | Ø 2 | 60.000 | |
| 24849 | 34 | SCREW | STEEL | | ROUND HD. Ø 2.46 | 60.000 | |
| 24848 | 2 | NUT | STEEL | | REDUCED Ø 6 ISO | 170.000 | |
| 24847 | 2 | MACHINE SCREW | STEEL | | R. HD. Ø 4.45 ISO | 170.000 | |
| 24846 | 2 | PIN | STEEL | | Ø 3 × 24 | 120.000 | |
| 24845 | 2 | PIN | STEEL | | Ø 3 × 47.2 | 120.000 | |
| 24844 | 2 | LATCH | 2024 | T3 | 60 × 46 × 4.6 | 65.000 | BENT SHEET |
| 24843 | 2* | LATCH | 2024 | T3 | 64 × 93 × 4.6 | 65.000 | BENT SHEET |
| 24842 | 2 | LATCH | 2024 | T3 | 55 × 35 × 4.6 | 65.000 | BENT SHEET |
| 24841 | 4 | HINGE | 15CDV6 | T | Ø 6 × 1 × 46 | 160.000 | TO REAM |
| 24840 | 2 | HINGE | 15CDV6 | | 26 × 14 × 1 | 120.000 | |
| 24809 | 2 | HINGE | 15CDV6 | | 42 × 12 × 1 | 120.000 | |
| 24808 | 4 | HINGE FITTING | 15CDV6 | | 102 × 35 × 2 | 120.000 | |
| 24807 | 4 | HINGE FITTING | 15CDV6 | | 145 × 33 × 2 | 120.000 | |
| 24804 | 4 | LATCH PLATE GUSSET | 2024 | T3 | 110 × 50 × 4.6 | 65.000 | |
| 24805 | 1 | LATCH PLATE GUSSET | 2024 | T3 | 155 × 38 × 4.6 | 65.000 | |
| 24804 | 2* | SIDE FRAME | 6061 | T6 | Ø 42 × 1 × 425 | 45.000 | TUBING |
| 24803 | 4 | REAR BOW | 6061 | T6 | Ø 42 × 1 × 1200 | 45.000 | TUBING |
| 24802 | 4 | FRONT BOW | 6061 | T6 | Ø 42 × 1 × 1050 | 45.000 | TUBING |
| 24801 | 1 | BUBBLE | PLEXIGLAS | | 1200 × 1200 × 2 | | |

AVIONS COLOMBAN — CRICRI MC 15

TITLE : CANOPY

Scale : 1/4

Drawn by : Colomban
Date : May 1981

Copyright © 1976 Michel COLOMBAN

This sheet is one of a set for the CRICRI MC 15 airplane intended for use by an amateur builder holding a valid license issued by his country of origin or residence. Any other use or reproduction, in whole or in part, of the designs, plans, or use of this plan, in whole or in part, will be deemed fraudulent.

218

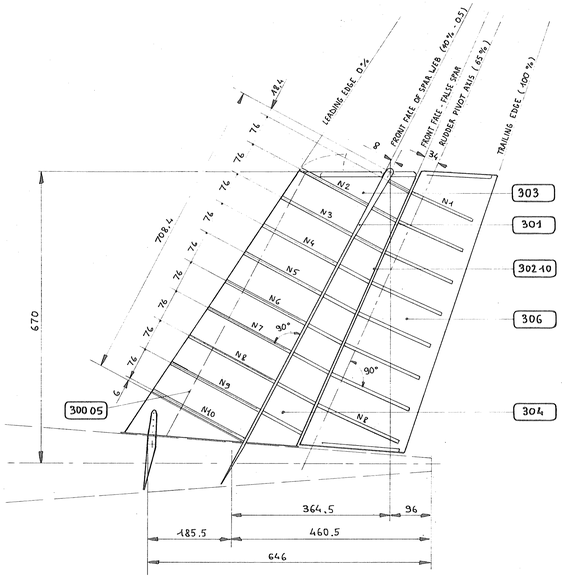


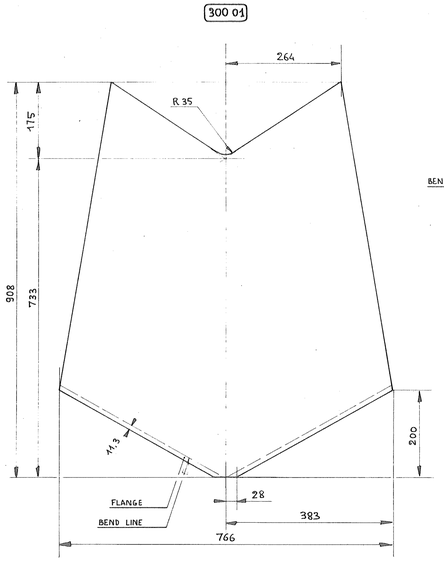


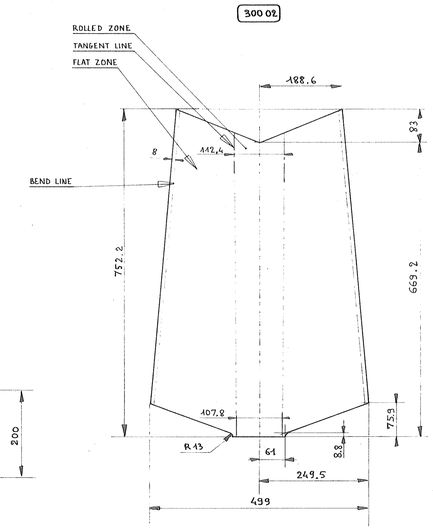


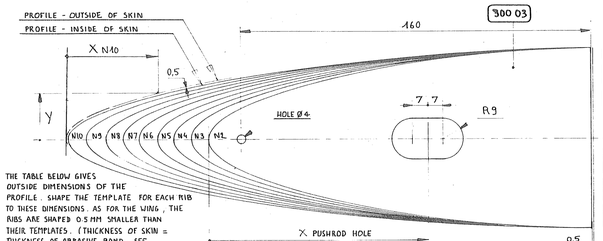


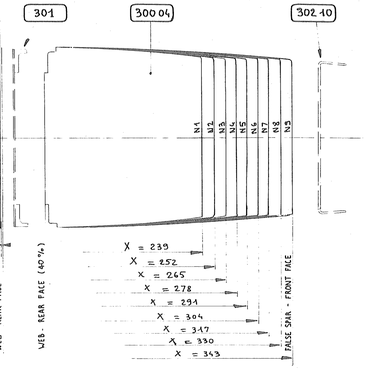


THE TABLE BELOW GIVES OUTSIDE DIMENSIONS OF THE PROFILE. SHAPE THE TEMPLATE FOR EACH RIB TO THESE DIMENSIONS. AS FOR THE WING, THE RIBS ARE SHAPED 0.5 MM SMALLER THAN THEIR TEMPLATES. (THICKNESS OF SKIN = THICKNESS OF ABRASIVE BAND. SEE MANUAL, CHAPTER 48 I).
XN10 SIGNIFIES: LENGTH CORRESPONDING TO RIB 10, XN9 .... RIB 9 .... ETC.
Y IS THE WIDTH DIMENSION COMMON TO ALL THE RIBS.

AIRFOIL CO-ORDINATES

| | X N1 | X N2 | X N3 | X N4 | X N5 | X N6 | X N7 | X N8 | X N9 | X N10 | Y |
|---|---|---|---|---|---|---|---|---|---|---|---|
| | 2.1 | 2.2 | 2.3 | 2.4 | 2.5 | 2.6 | 2.7 | 2.8 | 2.9 | 3.0 | 5.36 |
| | 3.15 | 3.3 | 3.45 | 3.6 | 3.75 | 3.9 | 4.05 | 4.2 | 4.35 | 4.5 | 6.57 |
| | 5.25 | 5.5 | 5.75 | 6.0 | 6.25 | 6.5 | 6.75 | 7.0 | 7.25 | 7.5 | 8.48 |
| | 10.5 | 11 | 11.5 | 12 | 12.5 | 13 | 13.5 | 14 | 14.5 | 15 | 12.01 |
| | 21 | 22 | 23 | 24 | 25 | 26 | 27 | 28 | 29 | 30 | 17.00 |
| | 31.5 | 33 | 34.5 | 36 | 37.5 | 39 | 40.5 | 42 | 43.5 | 45 | 20.86 |
| | 42 | 44 | 46 | 48 | 50 | 52 | 54 | 56 | 58 | 60 | 24.12 |
| | 63 | 66 | 69 | 72 | 75 | 78 | 81 | 84 | 87 | 90 | 29.68 |
| | 84 | 88 | 92 | 96 | 100 | 104 | 108 | 112 | 116 | 120 | 33.66 |
| | 105 | 110 | 115 | 120 | 125 | 130 | 135 | 140 | 145 | 150 | 36.84 |
| | 126 | 132 | 138 | 144 | 150 | 156 | 162 | 168 | 174 | 180 | 39.13 |
| | 147 | 154 | 161 | 168 | 175 | 182 | 189 | 196 | 203 | 210 | 40.53 |
| WEB - FRONT FACE | 161.5 | 175.5 | 183.5 | 191.5 | 199.5 | 207.5 | 215.5 | 223.5 | 231.5 | 239.5 | 40.99 |
| WEB - REAR FACE | 168 | 176 | 184 | 192 | 200 | 208 | 216 | 224 | 232 | 240 | 40.99 |
| | 189 | 198 | 207 | 216 | 225 | 234 | 243 | 252 | 261 | 270 | 40.57 |
| | 210 | 220 | 230 | 240 | 250 | 260 | 270 | 280 | 290 | 300 | 39.34 |
| ADDITIONAL DIMENSIONS TO AID IN LAYOUT | 231 | 242 | 253 | 264 | 275 | 286 | 297 | 308 | 319 | 330 | 37.34 |
| | 252 | 264 | 276 | 288 | 300 | 312 | 324 | 336 | 348 | 360 | 34.73 |
| | 273 | 286 | 299 | 312 | 325 | 338 | 351 | 364 | 377 | 390 | 31.48 |
| FALSE SPAR - FRONT FACE | 239 | 252 | 265 | 278 | 291 | 304 | 317 | 330 | 343 | 356 | |
| X PUSHROD HOLE | 100.5 | 104 | 104.5 | 102 | 102.5 | 103 | 103.5 | 104 | 104.5 | 105 | |
| LEADING EDGE RADIUS | 7.70 | 7.35 | 7.03 | 6.73 | 6.46 | 6.22 | 5.99 | 5.77 | 5.57 | 5.39 | |

EQUIVALENT THICKNESS:
- 0.4 MM ≡ 0.016"
- 0.5 MM ≡ 0.020"
- 6 MM ≡ 0.240"

| Reference | Qty | Description | Material | Cond | Dimensions | | Resist. | Comments |
|---|---|---|---|---|---|---|---|---|
| 300 05 | 1 | ALIGNING PIECE | BALSA | | 700 x 3 x 3 | | | |
| 300 04 | 9 | FIN RIB - AFT | ALCLAD | 100 | THICKNESS 6 MM | | | OR AL. 75 |
| 300 03 | 9 | FIN RIB - FORWARD | ALCLAD | 100 | THICKNESS 6 MM | | | OR AL. 75 |
| 300 02 | 4 | SKIN - RUBBER | 2024 | T3 | 753 x 499 x 0.4 | 63,000 | | E = 0.4 MM |
| 300 01 | 4 | SKIN - VERTICAL FIN | 2024 | T3 | 908 x 766 x 0.5 | 63,000 | | E = 0.5 MM |

AVIONS COLOMBAN — CRICRI MC 15

TITLE: FIN - GENERAL

Scale: 1/5 1/1

Drawn by: Colomban
Date: May 1981

Copyright © 1976 Michel COLOMBAN
This sheet is one of a set for the CRICRI MC 15 airplane intended for use by an amateur builder holding a valid license for construction of a single example of this aircraft. Any other use of this plan, in whole or in part, will be deemed fraudulent

300

## SPAR - REAR VIEW

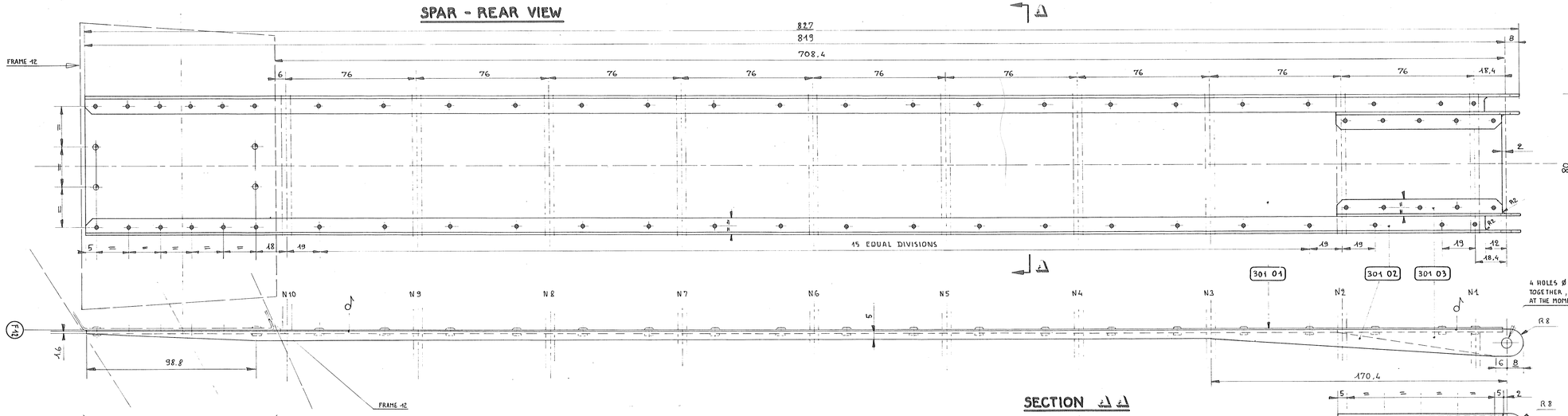


DRILLING AND RIVETING TO RESERVE FOR FINAL ASSEMBLY WITH FRAME 12. PROVISIONALLY DRILL Ø 2

BONDING: ● CAPS TO THE WEB

4 HOLES Ø 6 . PIN THE 4 CAPS TOGETHER, PERFECTLY SQUARED UP, AT THE MOMENT OF ASSEMBLING THEM TO THE WEB.

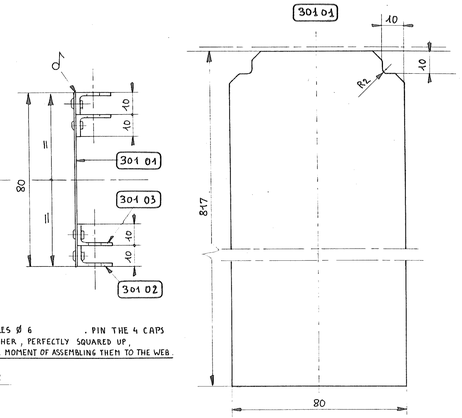


## SECTION

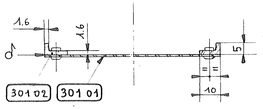


EQUIVALENT THICKNESS: - 0.5 MM ≡ 0.020" - 1.6 MM ≡ 0.063"

| Reference | Qty | Description | Material | Cond | Dimensions | | Resist. | Comments |
|---|---|---|---|---|---|---|---|---|
| 301 03 | 2* | DOUBLER - CAP | 2024 | T4 | 105 x 46 x 10 x 1.6 | 63,000 | | EXTRUSION |
| 301 02 | 2* | CAP | 2024 | T4 | 329 x 16 x 10 x 1.6 | 63,000 | | EXTRUSION |
| 301 01 | 1 | WEB | 2024 | T3 | 817 x 80 x 0.5 | 63,000 | | |

AVIONS COLOMBAN — CRICRI MC 15

TITLE: FIN SPAR

Scale: 1/1

Drawn by: Colomban
Date: May 1981

Copyright © 1976 Michel COLOMBAN
This sheet is one of a set for the CRICRI MC 15 airplane intended for use by an amateur builder holding a valid license for construction of a single example of this aircraft. Any other use of this plan, in whole or in part, will be deemed fraudulent

301

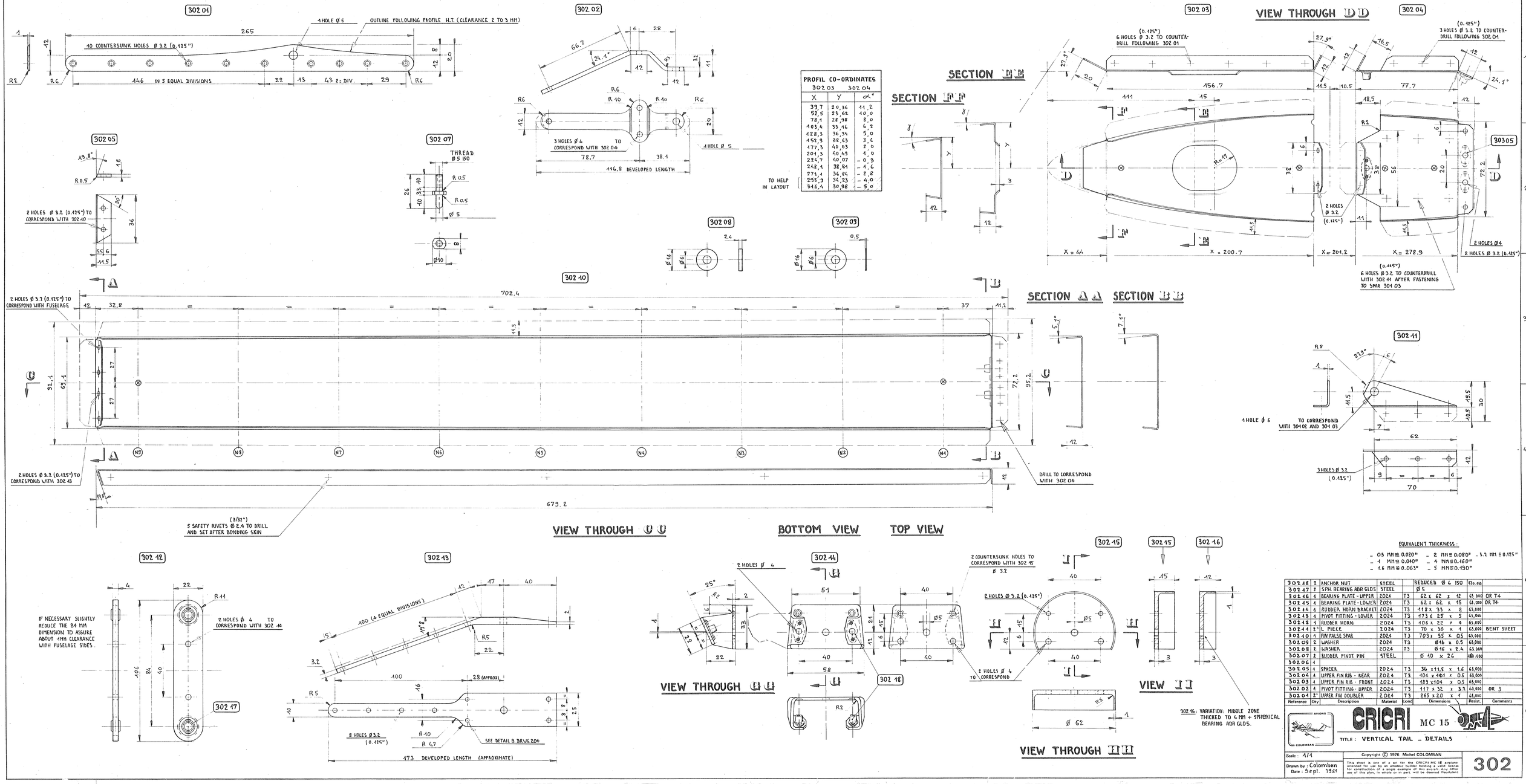


| PROFIL CO-ORDINATES 302.03 | | 302.04 |
|---|---|---|
| X | Y | α° |
| 39,7 | 20,36 | 11,2 |
| 52,5 | 23,62 | 10,0 |
| 78,1 | 28,98 | 8,0 |
| 103,4 | 33,16 | 6,2 |
| 128,3 | 36,34 | 5,0 |
| 152,9 | 38,63 | 3,6 |
| 177,3 | 40,03 | 2,0 |
| 201,3 | 40,43 | 1,0 |
| 224,7 | 40,07 | -0,3 |
| 248,1 | 38,84 | -1,6 |
| 271,4 | 36,84 | -2,8 |
| 295,3 | 34,23 | -4,0 |
| 316,4 | 30,98 | -5,0 |

| Reference | Qty | Description | Material | Gond | Dimensions | Resist. | Comments |
|---|---|---|---|---|---|---|---|
| 302.48 | 2 | ANCHOR NUT | STEEL | | REDUCED Ø 6 ISO | 43.010 | |
| 302.47 | 2 | SPH. BEARING ADR GLD5 | STEEL | | Ø 5 | | |
| 302.46 | 4 | BEARING PLATE - UPPER | 2024 | T3 | 62 x 62 x 12 | 63.000 | OR T4 |
| 302.45 | 4 | BEARING PLATE - LOWER | 2024 | T3 | 62 x 62 x 15 | 63.000 | OR T4 |
| 302.44 | 4 | RUDDER HORN BRACKET | 2024 | T3 | 118 x 33 x 2 | 63.000 | |
| 302.43 | 4 | PIVOT FITTING - LOWER | 2024 | T3 | 173 x 25 x 5 | 63.000 | |
| 302.42 | 4 | RUDDER HORN | 2024 | T3 | 106 x 22 x 4 | 63.000 | |
| 302.41 | 2* | L PIECE | 2024 | T3 | 70 x 30 x 4 | 63.000 | BENT SHEET |
| 302.40 | 4 | FIN FALSE SPAR | 2024 | T3 | 703 x 95 x 0.5 | 63.000 | |
| 302.09 | 2 | WASHER | 2024 | T3 | Ø 46 x 0.5 | 63.000 | |
| 302.08 | 2 | WASHER | 2024 | T3 | Ø 16 x 2.4 | 63.000 | |
| 302.07 | 2 | RUDDER PIVOT PIN | STEEL | | Ø 10 x 26 | 60.000 | |
| 302.06 | 4 | | | | | | |
| 302.05 | 4 | SPACER | 2024 | T3 | 36 x 11.5 x 1.6 | 63.000 | |
| 302.04 | 4 | UPPER FIN RIB - REAR | 2024 | T3 | 104 x 101 x 0.5 | 63.000 | |
| 302.03 | 4 | UPPER FIN RIB - FRONT | 2024 | T3 | 183 x 104 x 0.5 | 63.000 | |
| 302.02 | 4 | PIVOT FITTING - UPPER | 2024 | T3 | 117 x 32 x 3.2 | 63.000 | OR 3 |
| 302.01 | 2* | UPPER FIN DOUBLER | 2024 | T3 | 265 x 20 x 1 | 63.000 | |

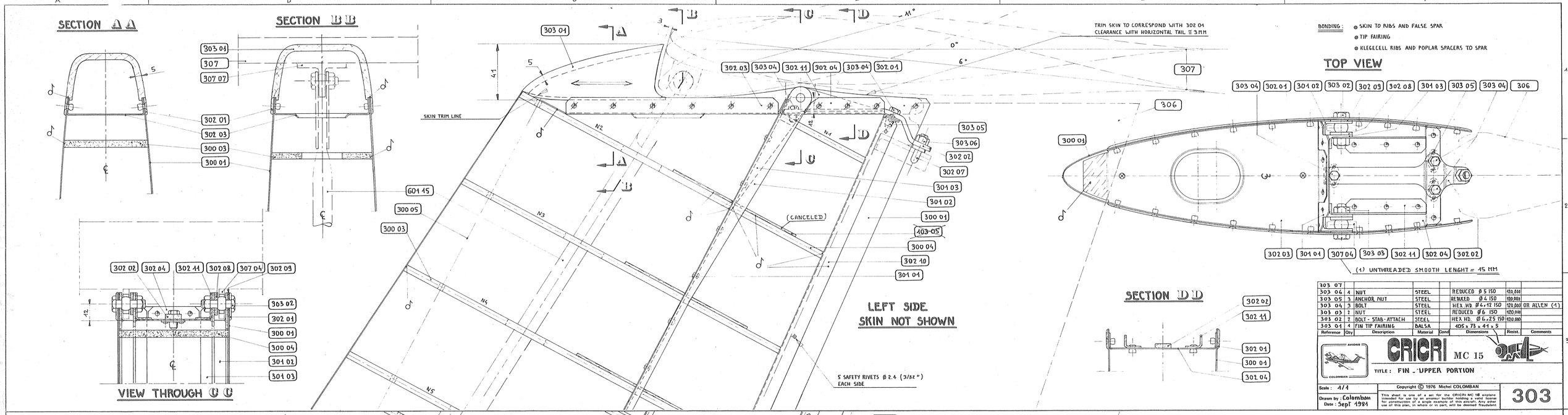


| Reference | Qty | Description | Material | Cond | Dimensions | Resist. | Comments |
|---|---|---|---|---|---|---|---|
| 303 07 | | | | | | | |
| 303 06 | 4 | NUT | STEEL | | REDUCED Ø 5 ISO | 120.000 | |
| 303 05 | 3 | ANCHOR NUT | STEEL | | REDUCED Ø 4 ISO | 120.000 | |
| 303 04 | 3 | BOLT | STEEL | | HEX. HD. Ø 4 x 12 ISO | 120.000 | OR ALLEN (1) |
| 303 03 | 2 | NUT | STEEL | | REDUCED Ø 6 ISO | 120.000 | |
| 303 02 | 2 | BOLT - STAB-ATTACH | STEEL | | HEX HD. Ø 6 x 25 ISO | 120.000 | |
| 303 01 | 4 | FIN TIP FAIRING | BALSA | | 405 x 73 x 44 x 5 | | |

AVIONS COLOMBAN — CRICRI MC 15

TITLE : FIN - UPPER PORTION

Scale : 1/1

Drawn by : Colomban
Date : Sept 1981

Copyright © 1976 Michel COLOMBAN
This sheet is one of a set for the CRICRI MC 15 airplane intended for use by an amateur builder holding a valid license for construction of a single example of this aircraft. Any other use of this plan, in whole or in part, will be deemed Fraudulent.

303

| Reference | Qty | Description | Material | Cond | Dimensions | Resist. | Comments |
|---|---|---|---|---|---|---|---|
| 304 05 | 3 | BOLT | STEEL | | HEX. HD. 4 x 25 ISO | 120.000 | |
| 304 04 | 4 | TAIL SKID | PIANO WIRE | | Ø 4,5 x 250 | 250.000 | |
| 304 03 | 4 | BOLT | STEEL | | HEX. HD. 4 x 12 ISO | 120.000 | |
| 304 02 | 4 | | | | | | |
| 304 01 | 1 | | | | | | |

AVIONS COLOMBAN — CRICRI MC 15

TITLE : FIN - LOWER PORTION

Scale : 1/1

Drawn by : Colomban
Date : Sept 1981

Copyright © 1976 Michel COLOMBAN
This sheet is one of a set for the CRICRI MC 15 airplane intended for use by an amateur builder holding a valid license for construction of a single example of this aircraft. Any other use of this plan, in whole or in part, will be deemed Fraudulent.

304

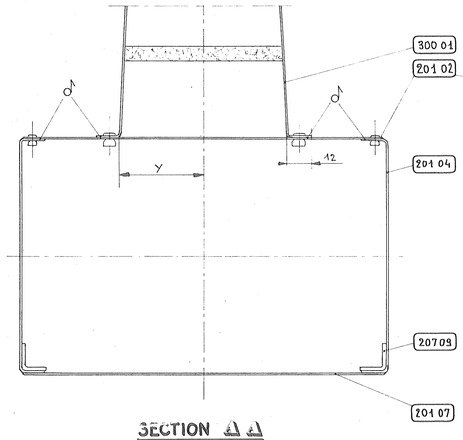


## SECTION A A

BONDING : ● FLANGE AT BASE OF FIN TO TOP OF FUSELAGE

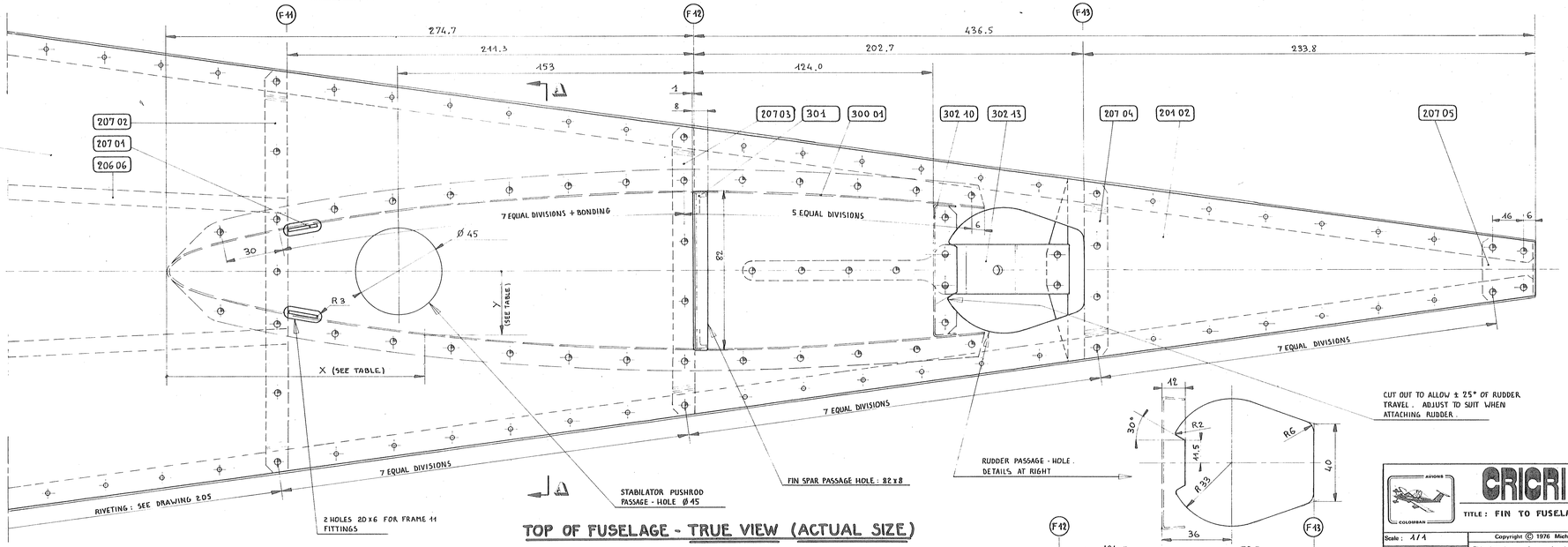


## TOP OF FUSELAGE - TRUE VIEW (ACTUAL SIZE)

| FIN AIRFOIL CO-ORDINATES AT FUSELAGE | |
|---|---|
| X | Y |
| 0 | 0 |
| 3.2 | 5.36 |
| 4.8 | 6.57 |
| 8.3 | 8.48 |
| 17.1 | 12.01 |
| 35.0 | 17.00 |
| 52.7 | 20.86 |
| 70.5 | 24.12 |
| 105.8 | 29.48 |
| 140.6 | 33.66 |
| 175.0 | 36.84 |
| 208.8 | 39.18 |
| 242.1 | 40.53 |
| 274.7 | 40.39 |
| 307.0 | 40.57 |
| 339.0 | 39.34 |
| 371.0 | 37.34 |
| 403.0 | 34.73 |
| 434.0 | 31.48 |

CRICRI MC 15

TITLE : FIN TO FUSELAGE ATTACHMENT

Scale : 1/4

Drawn by : Colomban
Date : Sept 1981

Copyright © 1976 Michel COLOMBAN
This sheet is one of a set for the CRICRI MC 15 airplane intended for use by an amateur builder holding a valid license for construction of a single example of this aircraft. Any other use of this plan, in whole or in part, will be deemed fraudulent

305

## BOTTOM VIEW

(WITHOUT RUDDER HORN 302 12)

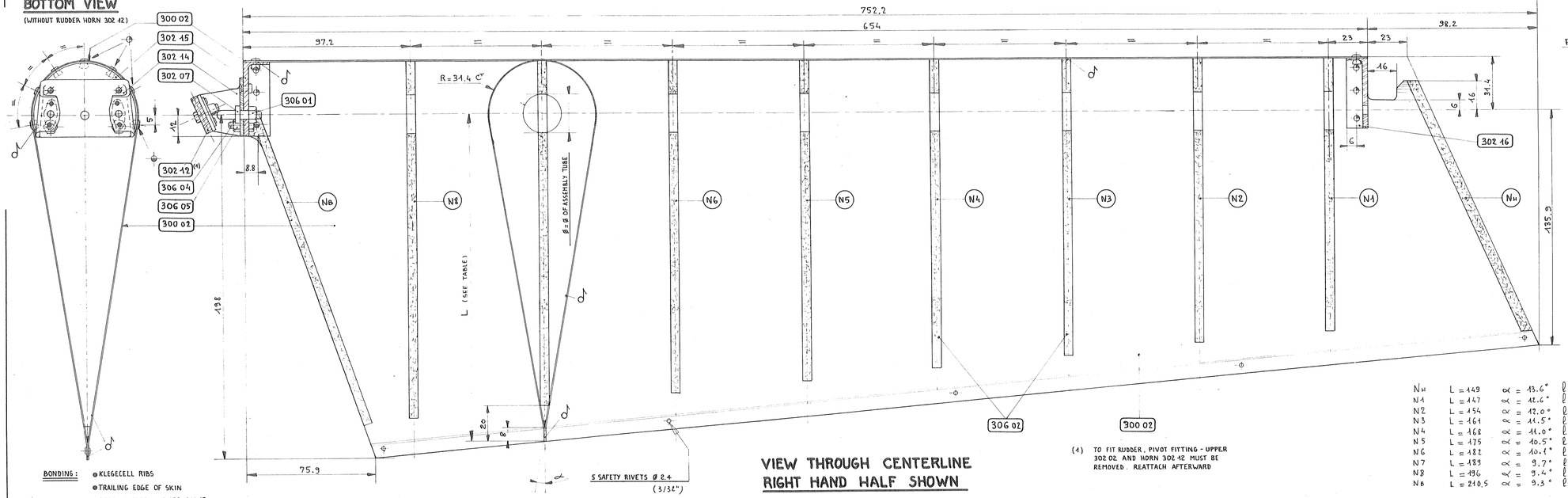


BONDING :
- ● KLEGECELL RIBS
- ● TRAILING EDGE OF SKIN
- ● BEARING PLATE LOWER 302 15

VIEW THROUGH CENTERLINE
RIGHT HAND HALF SHOWN

(1) TO FIT RUDDER , PIVOT FITTING - UPPER 302 02 AND HORN 302 12 MUST BE REMOVED . REATTACH AFTERWARD

| | | | | |
|---|---|---|---|---|
| N11 | L = 149 | α = 13.6° | β = 144 |
| N1 | L = 147 | α = 12.6° | β = 139 |
| N2 | L = 154 | α = 12.0° | β = 146 |
| N3 | L = 161 | α = 11.5° | β = 153 |
| N4 | L = 168 | α = 11.0° | β = 160 |
| N5 | L = 175 | α = 10.5° | β = 167 |
| N6 | L = 182 | α = 10.1° | β = 174 |
| N7 | L = 189 | α = 9.7° | β = 181 |
| N8 | L = 196 | α = 9.4° | β = 188 |
| N0 | L = 210.5 | α = 9.3° | β = 202.5 |

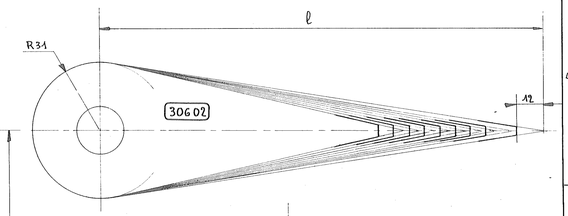


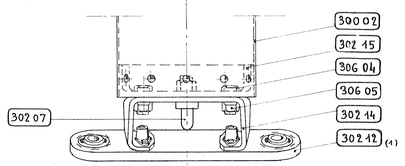


## LOWER PART - FRONT VIEW

| Reference | Qty | Description | Material | Cond | Dimensions | Resist. | Comments |
|---|---|---|---|---|---|---|---|
| 306 05 | 2 | NUT | STEEL | | REDUCED Ø 4 ISO | 170.006 | |
| 306 04 | 2 | BOLT | STEEL | | HEX HD Ø 4 x 25 ISO | 170.006 | |
| 306 03 | | | | | | | |
| 306 02 | 10 | RIB | KLEGECELL | 400 | THICKNESS = 6 MM | | OR CONTICELL 80 |
| 306 01 | 4 | NUT | STEEL | | REDUCED Ø 5 ISO | 170.006 | |

CRICRI MC 15

TITLE : RUDDER

Scale : 1/4

Drawn by : Colomban
Date : Sept 1981

Copyright © 1976 Michel COLOMBAN
This sheet is one of a set for the CRICRI MC 15 airplane intended for use by an amateur builder holding a valid license for construction of a single example of this aircraft. Any other use of this plan, in whole or in part, will be deemed fraudulent

306

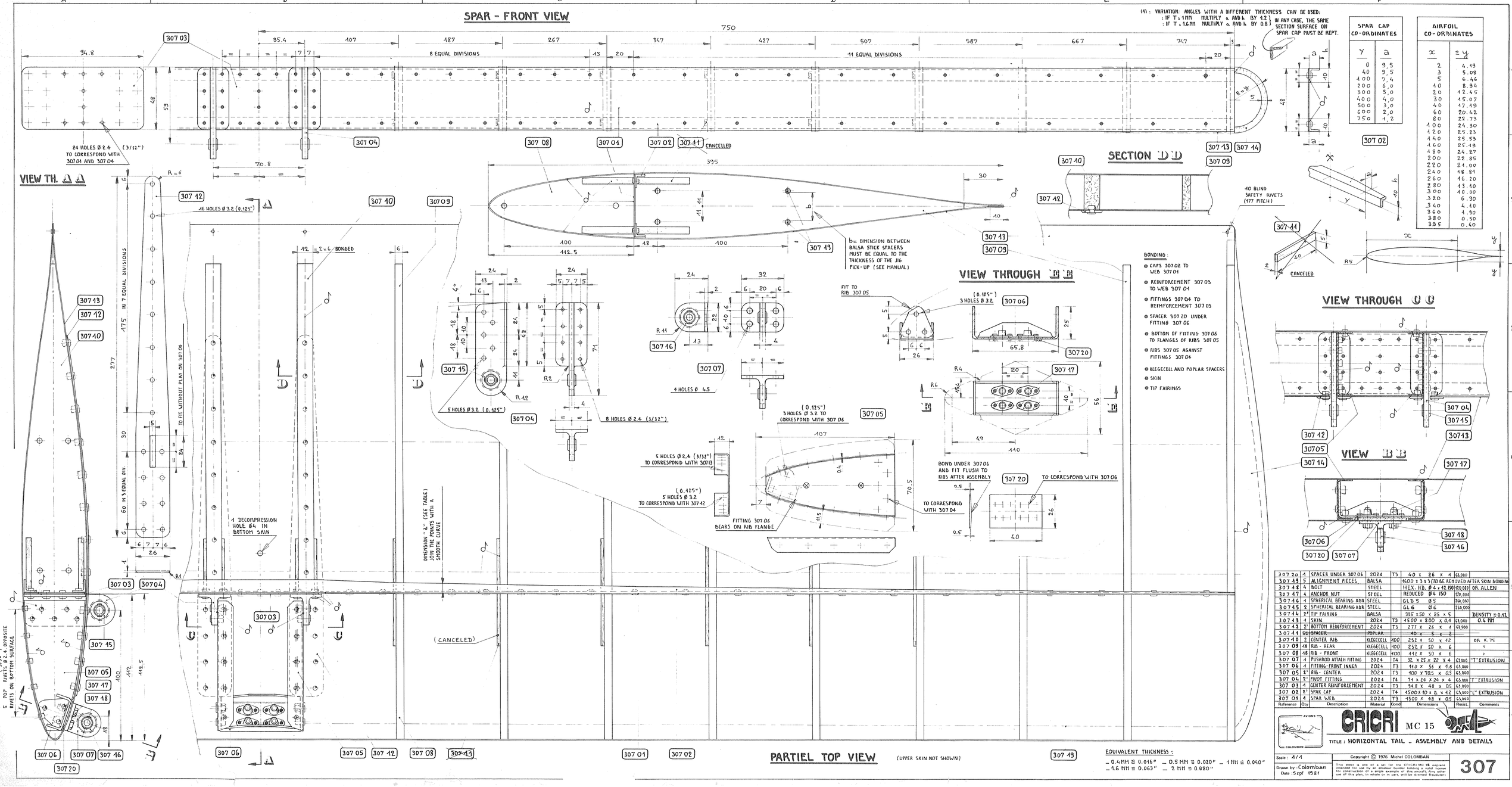


| SPAR CAP CO-ORDINATES | |
|---|---|
| y | a |
| 0 | 9,5 |
| 40 | 9,5 |
| 100 | 7,4 |
| 200 | 6,0 |
| 300 | 5,0 |
| 400 | 4,0 |
| 500 | 3,0 |
| 600 | 2,0 |
| 750 | 1,2 |

| AIRFOIL CO-ORDINATES | |
|---|---|
| x | ± y |
| 2 | 4.49 |
| 3 | 5.08 |
| 5 | 6.46 |
| 10 | 8.94 |
| 20 | 12.45 |
| 30 | 15.07 |
| 40 | 17.19 |
| 60 | 20.42 |
| 80 | 22.73 |
| 100 | 24.30 |
| 120 | 25.23 |
| 140 | 25.53 |
| 160 | 25.19 |
| 180 | 24.27 |
| 200 | 22.85 |
| 220 | 21.00 |
| 240 | 18.81 |
| 260 | 16.20 |
| 280 | 13.40 |
| 300 | 10.00 |
| 320 | 6.90 |
| 340 | 4.40 |
| 360 | 1.90 |
| 380 | 0.50 |
| 395 | 0.40 |

| Reference | Qty | Description | Material | Cond | Dimensions | Resist. | Comments |
|---|---|---|---|---|---|---|---|
| 307.20 | 1 | SPACER UNDER 307.06 | 2024 | T3 | 40 x 26 x 4 | 63,000 | |
| 307.19 | 5 | ALIGNMENT PIECES | BALSA | | 1600 x 3 x 3 (TO BE REMOVED AFTER SKIN BONDING | | |
| 307.18 | 4 | BOLT | STEEL | | HEX. HD. Ø 4 x 12 ISO | 170,000 | OR ALLEN |
| 307.17 | 4 | ANCHOR NUT | STEEL | | REDUCED Ø 4 ISO | 170,000 | |
| 307.16 | 4 | SPHERICAL BEARING ADA | STEEL | | GLB 5 Ø5 | 260,000 | |
| 307.15 | 2 | SPHERICAL BEARING ADA | STEEL | | GL 6 Ø6 | 260,000 | |
| 307.14 | 2* | TIP FAIRING | BALSA | | 395 x 50 x 25 x 5 | | DENSITY ≅ 0.42 |
| 307.13 | 4 | SKIN | 2024 | T3 | 1500 x 800 x 0.4 | 63,000 | 0.4 MM |
| 307.12 | 2 | BOTTOM REINFORCEMENT | 2024 | T3 | 277 x 26 x 1 | 63,000 | |
| 307.11 | 5 | SPACER | POPLAR | | 40 x 5 x 2 | | |
| 307.10 | 2 | CENTER RIB | KLEGECELL 100 | | 252 x 50 x 12 | | OR K. 75 |
| 307.09 | 18 | RIB - REAR | KLEGECELL 100 | | 252 x 50 x 6 | | " |
| 307.08 | 18 | RIB - FRONT | KLEGECELL 100 | | 442 x 50 x 6 | | " |
| 307.07 | 4 | PUSHROD ATTACH FITTING | 2024 | T4 | 32 x 25 x 22 x 4 | 63,500 | "T" EXTRUSION |
| 307.06 | 4 | FITTING-FRONT INNER | 2024 | T3 | 110 x 56 x 6.6 | 63,500 | |
| 307.05 | 2* | RIB - CENTER | 2024 | T3 | 400 x 70.5 x 0.5 | 63,500 | |
| 307.04 | 2* | PIVOT FITTING | 2024 | T4 | 71 x 24 x 24 x 4 | 63,500 | "T" EXTRUSION |
| 307.03 | 1 | CENTER REINFORCEMENT | 2024 | T3 | 94.8 x 48 x 0.5 | 63,000 | |
| 307.02 | 1* | SPAR CAP | 2024 | T4 | 4500 x 10 x 8 x 42 | 63,500 | L" EXTRUSION |
| 307.01 | 4 | SPAR WEB | 2024 | T3 | 4500 x 48 x 0.5 | 63,500 | |

| | | | | | | |
|---|---|---|---|---|---|---|
| 400 01 | 1 | COMPOSITE GEAR LEG MC/AS - 15.50 VE | | | | |
| 400 02 | 2 | HUB-AXLE ASSEMBLY MC/1B 42.16 | | | | |
| 400 03 | 2 | TIRE AND INNER TUBE. REF 2.5 x 3. 4 CANVAS | | | | |
| 400 04 | 2 | UPPER CLAMP | 2024 | T4 | 122 x 30 x 20 | DR 75 |
| 400 05 | 2 | LOWER CLAMP | 2024 | T4 | 86 x 20 x 46 | 43,000 DR 75 |
| 400 06 | 4 | SOCKET | 15CDV6 | T | Ø 18 x 1 x 25 | 160,000 TUBING |
| 400 07 | 2 | FITTING | 15CDV6 | T | 69 x 45 x 15 | 160,000 |
| 400 08 | 2 | FITTING | 15CD16 | T | 69 x 45 x 1.5 | 160,000 |
| 400 09 | 8 | REINFORCEMENT | STEEL | | 20 x 8 x 1 | 110,000 |
| 400 10 | 16 | SPACER | 2024 | | 22 x 26 x 1 | 43,000 |
| 400 11 | 4 | SILENTBLOC PAULSTRA Ref: 864 103 (TO BOND IN 400 06) | | | | |
| 400 12 | 4 | PIN | STEEL | | Ø 4 x 85 | 160,000 |
| 400 13 | 2 | SPACER | 2024 | | Ø 45 x 4 x 5 | 43,000 |
| 400 14 | 2 | ROD | 2024 | | 105 x 12 x 5 | 43,000 |
| 400 15 | 4 | SPACER | | | Ø 6 . 1 x 5.3 | 120,000 TUBING |
| 400 16 | 2* | ANGLE | 2024 | T4 | 394 x 46 x 12 x 1.6 | 43,000 EXTRUSION |
| 400 17 | 2* | REINFORCEMENT | 2024 | T3 | 83 x 44 x 2 | 43,000 |
| 400 18 | 16 | BOLT | STEEL | | HEX. HD. Ø 4 x 25 | 170,000 |
| 400 19 | 20 | NUT | STEEL | | REDUCED Ø 4 ISO | 170,000 |
| 400 20 | 2 | BOLT | STEEL | | HEX. HD. Ø 4 x 30 | 170,000 |
| 400 21 | 8 | BOLT | STEEL | | HEX. HD. Ø 3 x 22 | 170,000 |
| 400 22 | 8 | NUT | STEEL | | REDUCED Ø 3 ISO | 170,000 |
| 400 23 | | WASHER | STEEL | | Ø 4 | 170,000 |
| 400 24 | 8 | BOLT | STEEL | | CTK. HD Ø 5.30 ISO | 170,000 |
| 400 25 | 8 | NUT | STEEL | | REDUCED Ø 5 ISO | 170,000 |
| 400 26 | 4 | BOLT | STEEL | | HEX. HD. Ø 8 x 70 | 200,000 |
| 400 27 | 4 | BOLT | STEEL | | HEX. HD. Ø 6 x 25 | 200,000 |
| 400 28 | 4 | WASHER | STEEL | | Ø 8 | |

EQUIVALENT THICKNESS: - 1 MM = 0.040" - 2 MM = 0.080"
- 4 MM = 0.16" - 5 MM = 0.20"

⊕ BONDING : SILENTBLOCS 400 11 IN SOCKET 400 06 AT 400 - 420 °F

## LEFT EXTERIOR VIEW

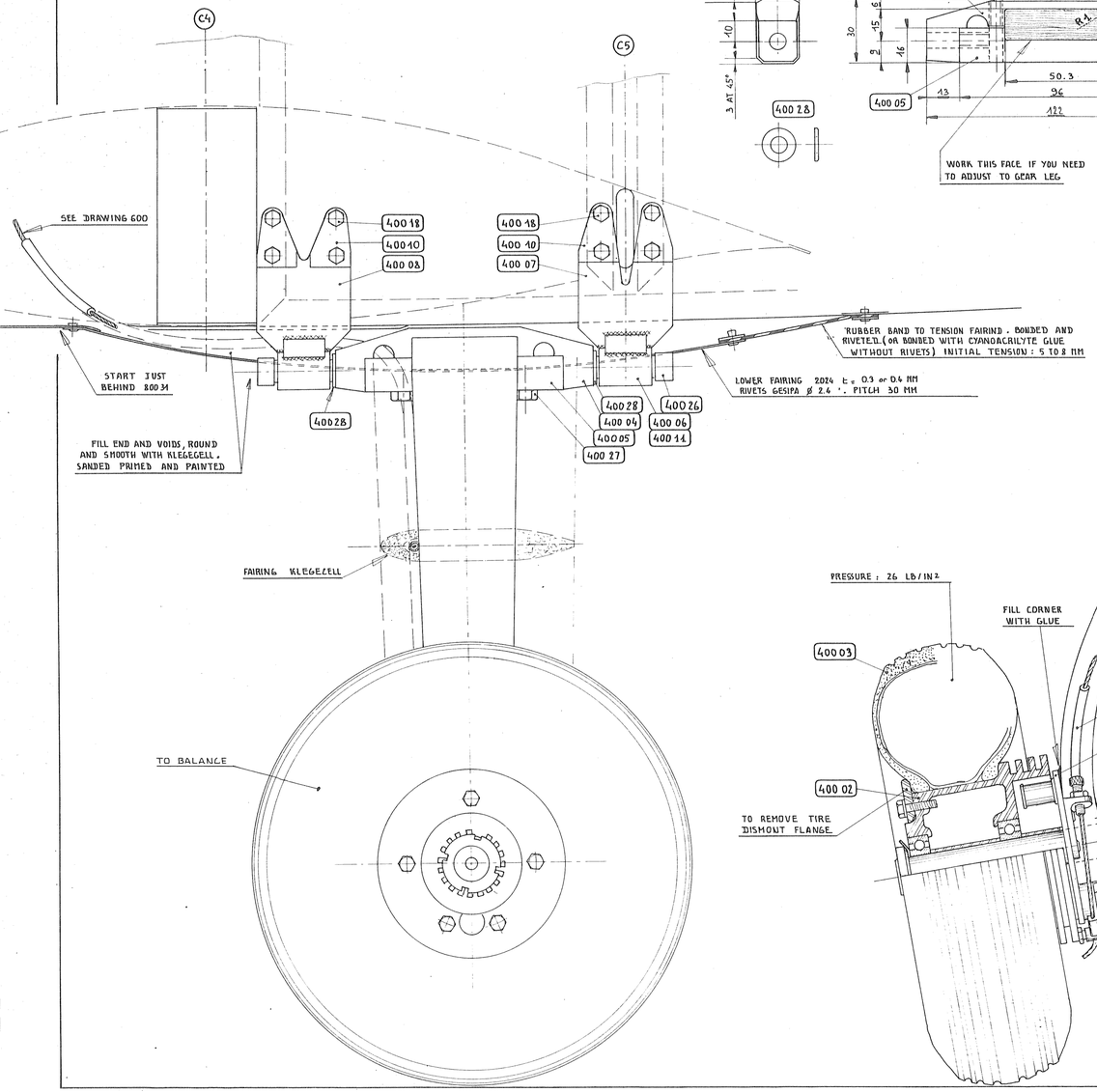


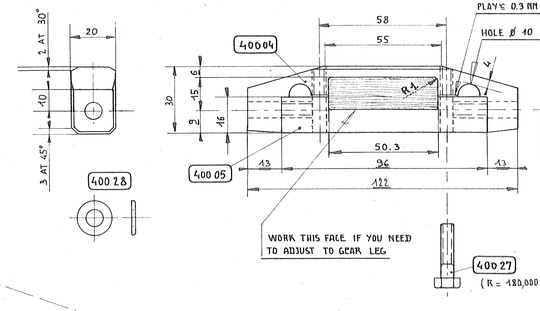


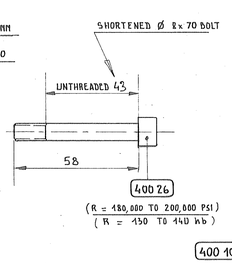


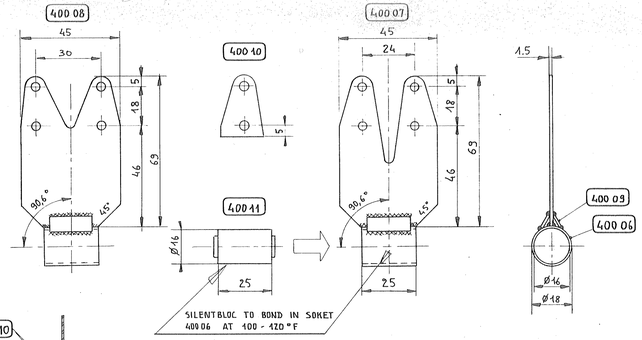





## FRONT VIEW

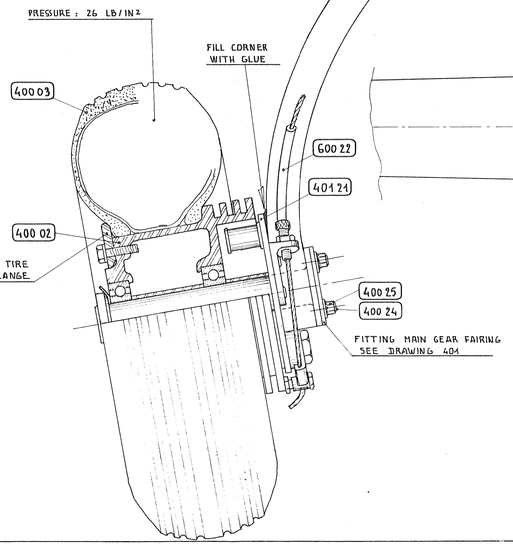


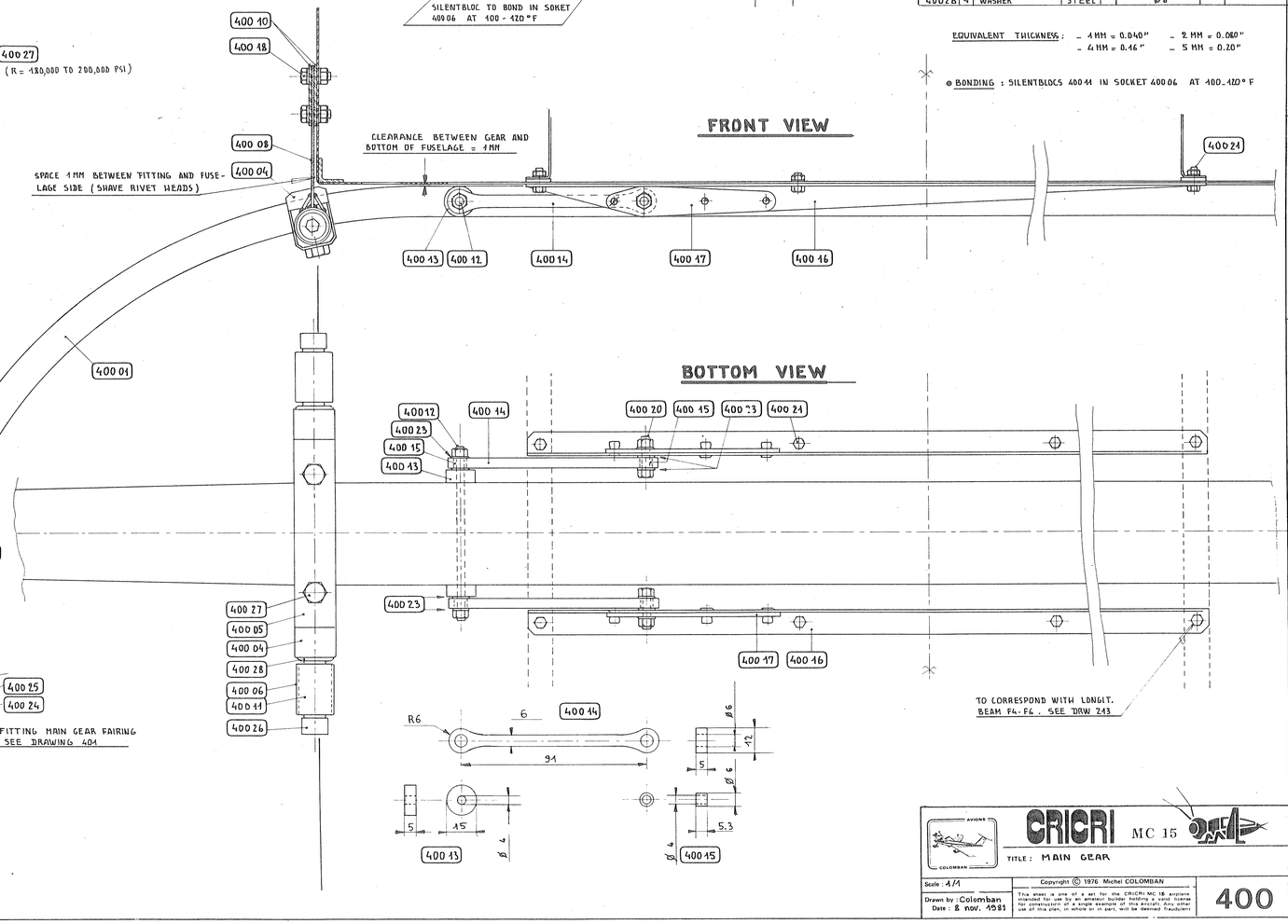


## BOTTOM VIEW

CRICRI MC 15

TITLE : MAIN GEAR

Scale : 1/1

Drawn by : Colomban
Date : 8 nov. 1981

Copyright © 1976 Michel COLOMBAN
This sheet is one of a set for the CRICRI MC 15 airplane intended for use by an amateur builder holding a valid license for construction of a single example of this aircraft. Any other use of this plan, in whole or in part, will be deemed fraudulent

400

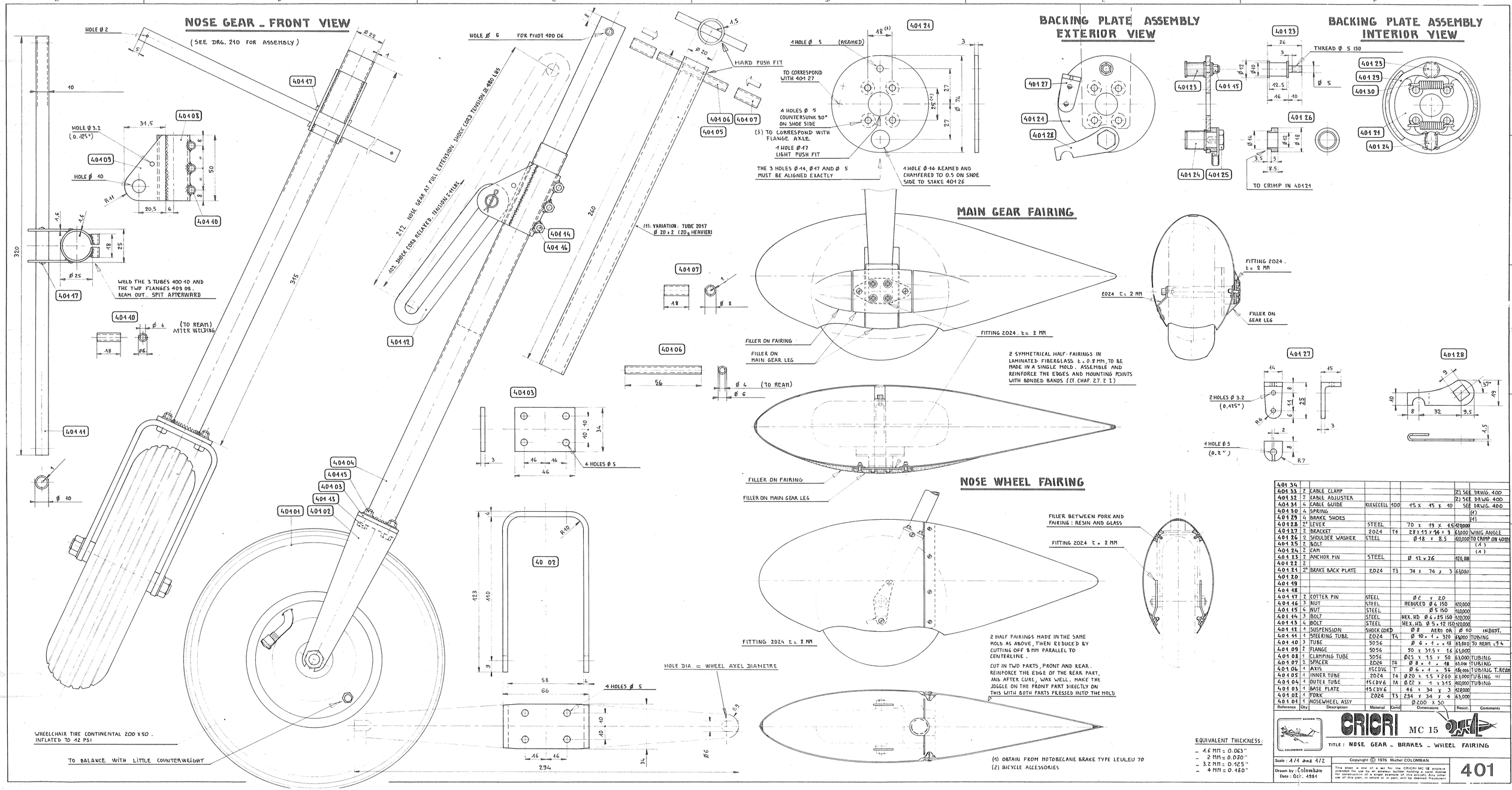


| Reference | Qty | Description | Material | Cond | Dimensions | Resist. | Comments |
|---|---|---|---|---|---|---|---|
| 401 34 | | | | | | | |
| 401 33 | 2 | CABLE CLAMP | | | | (2) | SEE DRWG. 400 |
| 401 32 | 2 | CABLE ADJUSTER | | | | (2) | SEE DRWG. 400 |
| 401 31 | 4 | CABLE GUIDE | KLEGECEEL | 100 | 15 x 15 x 10 | | SEE DRWG. 400 |
| 401 30 | 4 | SPRING | | | | | (1) |
| 401 29 | 4 | BRAKE SHOES | | | | | (1) |
| 401 28 | 2* | LEVER | STEEL | | 70 x 19 x 4.5 | 120,000 | |
| 401 27 | 2 | BRACKET | 2024 | T4 | 28 x 15 x 14 x 3 | 63,000 | WING ANGLE |
| 401 26 | 2 | SHOULDER WASHER | STEEL | | Ø 18 x 8.5 | 400,000 | TO CRIMP ON 401 24 |
| 401 25 | 2 | BOLT | | | | | (1) |
| 401 24 | 2 | CAM | | | | | (1) |
| 401 23 | 2 | ANCHOR PIN | STEEL | | Ø 12 x 26 | 120,000 | |
| 401 22 | 2 | | | | | | |
| 401 21 | 2* | BRAKE BACK PLATE | 2024 | T3 | 74 x 74 x 3 | 63,000 | |
| 401 20 | | | | | | | |
| 401 19 | | | | | | | |
| 401 18 | | | | | | | |
| 401 17 | 2 | COTTER PIN | STEEL | | Ø 2 x 20 | | |
| 401 16 | 3 | NUT | STEEL | | REDUCED Ø 4 150 | 120,000 | |
| 401 15 | 6 | NUT | STEEL | | Ø 5 150 | 120,000 | |
| 401 14 | 3 | BOLT | STEEL | | HEX. HD Ø 4 x 25 150 | 120,000 | |
| 401 13 | 4 | BOLT | STEEL | | HEX. HD Ø 5 x 12 150 | 120,000 | |
| 401 12 | 1 | SUSTENSION | SHOCK CORD | | Ø 8 AERO OR Ø 10 | | INDUST. |
| 401 11 | 1 | STEERING TUBE | 2024 | T4 | Ø 40 x 1 x 320 | 63,000 | TUBING |
| 401 10 | 3 | TUBE | 5056 | | Ø 6 x 1 x 48 | 63,000 | TO REAM ±0.4 |
| 401 09 | 2 | FLANGE | 5056 | | 50 x 34.5 x 16 | 63,000 | |
| 401 08 | 1 | CLAMPING TUBE | 5056 | | Ø25 x 1.5 x 50 | 63,000 | TUBING |
| 401 07 | 2 | SPACER | 2024 | T4 | Ø 8 x 1 x 18 | 63,000 | TUBING |
| 401 06 | 1 | AXIS | 15CDV6 | T | Ø 6 x 4 x 56 | 160,000 | TUBING T.REAM |
| 401 05 | 1 | INNER TUBE | 2024 | T4 | Ø 20 x 1.5 x 260 | 63,000 | TUBING (1) |
| 401 04 | 1 | OUTER TUBE | 15CDV6 | T4 | Ø 22 x 1 x 345 | 160,000 | TUBING |
| 401 03 | 1 | BASE PLATE | 15CDV6 | | 46 x 34 x 3 | 120,000 | |
| 401 02 | 1 | FORK | 2024 | T3 | 234 x 34 x 4 | 63,000 | |
| 401 01 | 1 | NOSEWHEEL ASSY | | | Ø 200 x 50 | | |

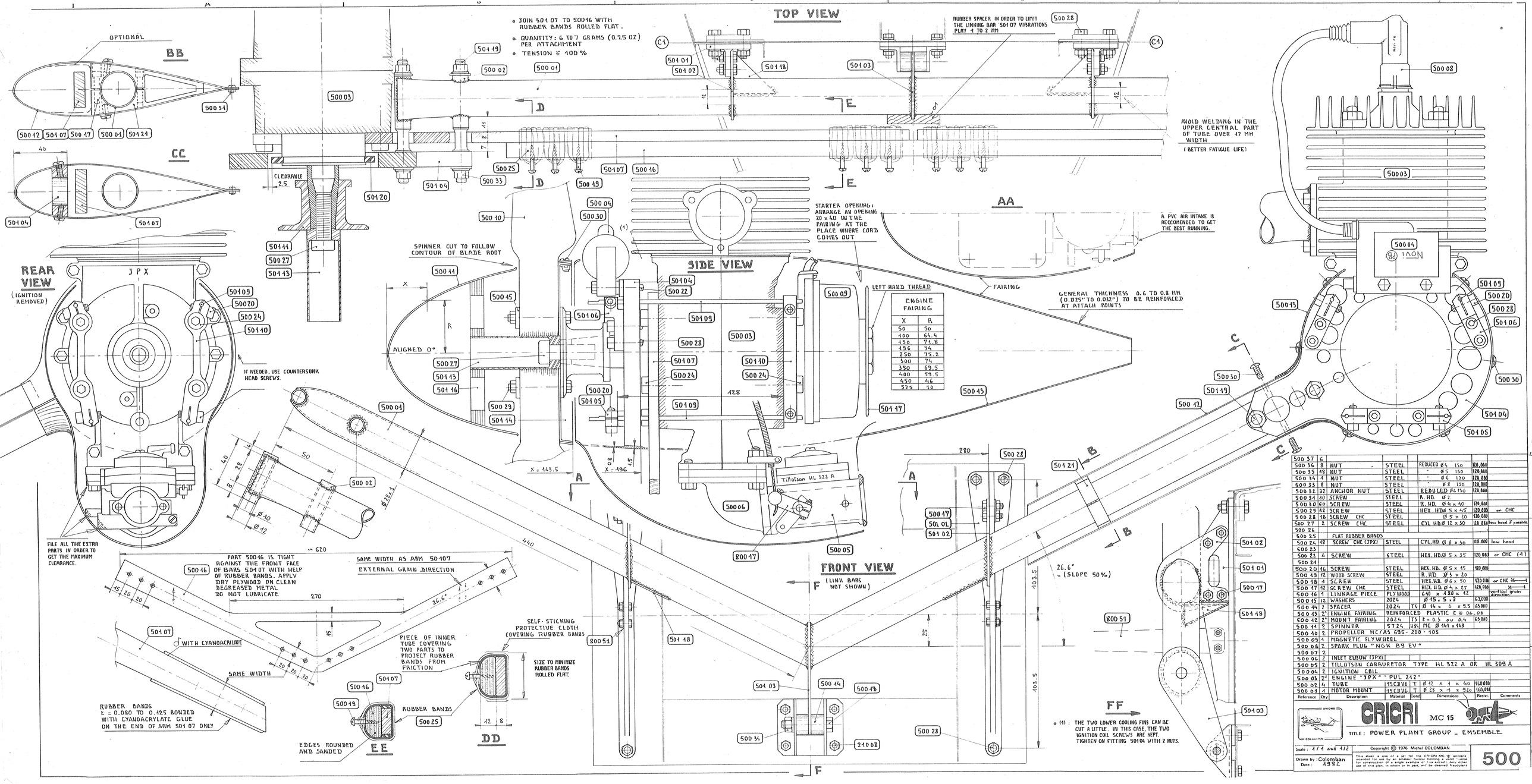


| ENGINE FAIRING | |
|---|---|
| X | R |
| 50 | 50 |
| 100 | 64.4 |
| 150 | 71.8 |
| 196 | 74 |
| 250 | 73.2 |
| 300 | 74 |
| 350 | 69.5 |
| 400 | 53.5 |
| 450 | 46 |
| 575 | 16 |

| Reference | Qty | Description | Material | Cond | Dimensions | Resist. | Comments |
|---|---|---|---|---|---|---|---|
| 500 37 | 6 | | | | | | |
| 500 36 | 8 | NUT | STEEL | | REDUCED Ø5 150 | 120.000 | |
| 500 35 | 49 | NUT | STEEL | | " Ø5 150 | 120.000 | |
| 500 34 | 4 | NUT | STEEL | | " Ø6 150 | 120.000 | |
| 500 33 | 8 | NUT | STEEL | | " Ø8 150 | 120.000 | |
| 500 32 | 32 | ANCHOR NUT | STEEL | | REDUCED Ø6 150 | 120.000 | |
| 500 31 | 40 | SCREW | STEEL | | R. HD. Ø2 | | |
| 500 30 | 60 | SCREW | STEEL | | R. HD Ø4 x 40 | 120.000 | |
| 500 29 | 12 | SCREW | STEEL | | HEX. HD Ø 5 x 45 | 120.000 | or CHC |
| 500 28 | 18 | SCREW CHC | STEEL | | Ø 5 x 20 | 120.000 | |
| 500 27 | 2 | SCREW CHC | STEEL | | CYL HD Ø 12 x 30 | 120.000 | low head if possible |
| 500 26 | | | | | | | |
| 500 25 | | FLAT RUBBER BANDS | | | | | |
| 500 24 | 49 | SCREW CHC (JPX) | STEEL | | CYL.HD. Ø 8 x 30 | 110.000 | low head |
| 500 23 | | | | | | | |
| 500 22 | 4 | SCREW | STEEL | | HEX. HD Ø 5 x 35 | 120.000 | or CHC (1) |
| 500 21 | | | | | | | |
| 500 20 | 16 | SCREW | STEEL | | HEX. HD. Ø 5 x 15 | 120.000 | |
| 500 19 | 12 | WOOD SCREW | STEEL | | R. HD Ø 3 x 20 | | |
| 500 18 | 4 | SCREW | STEEL | | HEX. HD. Ø 6 x 50 | 120.000 | or CHC X—1 |
| 500 17 | 12 | SCREW CHC | STEEL | | HEX HD Ø 4 x 25 | 120.000 | X—1 |
| 500 16 | 1 | LINKAGE PIECE | PLYWOOD | | 640 x 430 x 42 | | vertical grain Aircraft |
| 500 15 | 12 | WASHERS | 2024 | | Ø 15 - 5 x 3 | 63.000 | |
| 500 14 | 2 | SPACER | 2024 | T4 | Ø 14 x 6 x 9.5 | 65.000 | |
| 500 13 | 2* | ENGINE FAIRING | REINFORCED PLASTIC ℓ ≅ 0.6 - 0.8 | | | | |
| 500 12 | 2* | MOUNT FAIRING | 2024 | T3 | ℓ = 0.5 ou 0.4 | 65.000 | |
| 500 11 | 2 | SPINNER | 5754 | H34 | MC Ø 141 x 143 | | |
| 500 10 | 2 | PROPELLER MC/AS 695 - 200 - 103 | | | | | |
| 500 09 | 1 | MAGNETIC FLYWHEEL | | | | | |
| 500 08 | 2 | SPARK PLUG "NGK B9 EV" | | | | | |
| 500 07 | 2 | | | | | | |
| 500 06 | 2 | INLET ELBOW (JPX) | | | | | |
| 500 05 | 2 | TILLOTSON CARBURETOR TYPE HL 322 A OR HL 309 A | | | | | |
| 500 04 | 2 | IGNITION COIL | | | | | |
| 500 03 | 2* | ENGINE "JPX" "PUL 242" | | | | | |
| 500 02 | 4 | TUBE | 15CDV6 | T | Ø 12 x 1 x 40 | 40.000 | |
| 500 01 | 1 | MOTOR MOUNT | 15CDV6 | T | Ø 28 x 1 x 320 | 160.000 | |

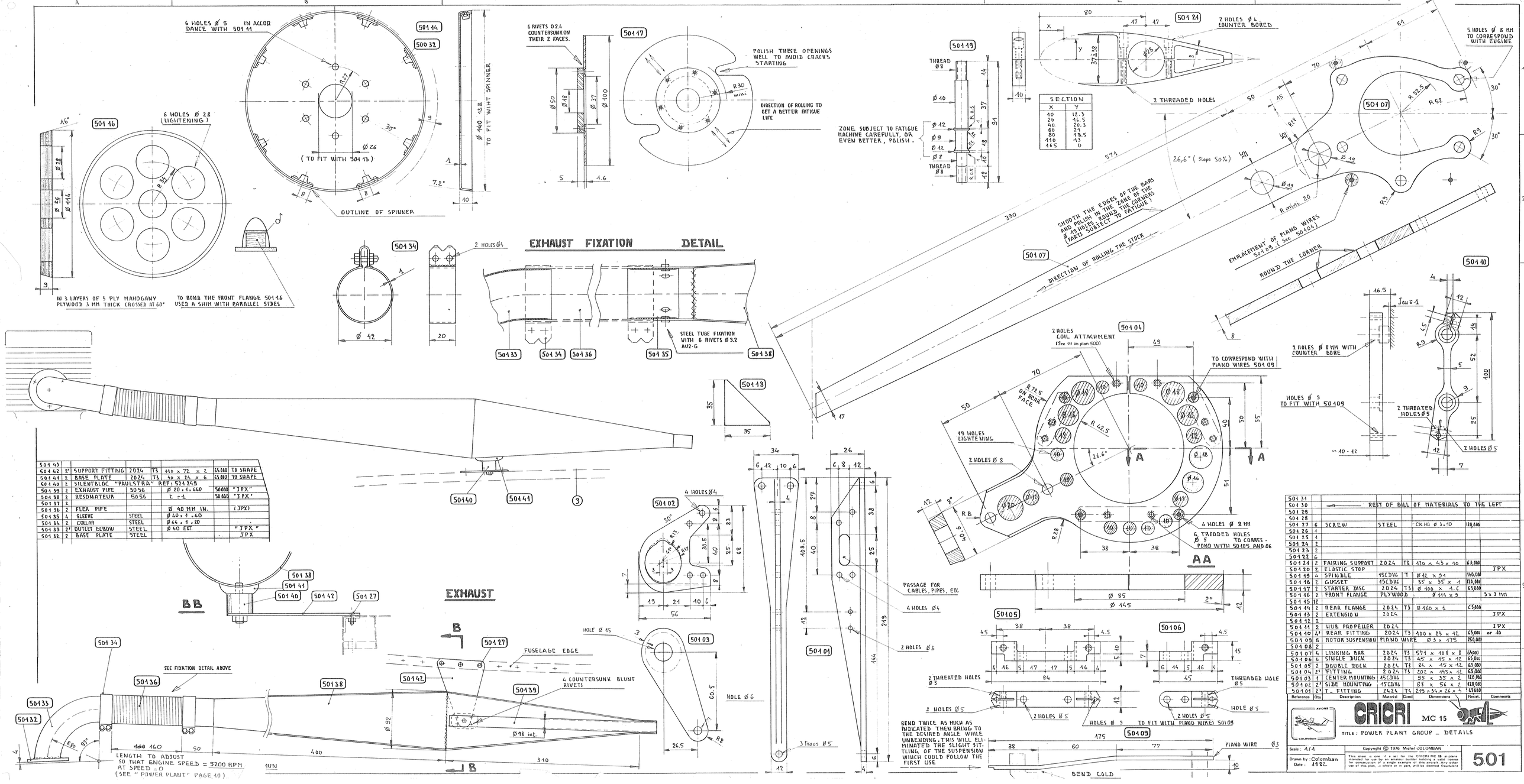


| | | | | | | | |
|---|---|---|---|---|---|---|---|
| 501 43 | | | | | | | |
| 501 42 | 2* | SUPPORT FITTING | 2024 | T3 | 110 x 72 x 2 | 65.000 | TO SHAPE |
| 501 41 | 2 | BASE PLATE | 2024 | T3 | 40 x 24 x 6 | 65.000 | TO SHAPE |
| 501 40 | 2 | SILENTBLOC "PAULSTRA" REF: 521 249 | | | | | |
| 501 39 | 2 | EXHAUST PIPE | 50 S6 | | Ø 20 x 1.440 | 50.000 | "JPX" |
| 501 38 | 2 | RESONATEUR | 50 S6 | | t = 1 | 50.000 | "JPX" |
| 501 37 | 2 | | | | | | |
| 501 36 | 2 | FLEX PIPE | | | Ø 40 MM IN. | | (JPX) |
| 501 35 | 4 | SLEEVE | STEEL | | Ø 40 x 1 x 40 | | |
| 501 34 | 2 | COLLAR | STEEL | | Ø 44 x 1 x 20 | | |
| 501 33 | 2* | OUTLET ELBOW | STEEL | | Ø 40 EXT. | | "JPX" |
| 501 32 | 2 | BASE PLATE | STEEL | | | | JPX |

| | | | | | | | |
|---|---|---|---|---|---|---|---|
| 501 31 | | | | | | | |
| 501 30 | | REST OF BILL OF MATERIALS TO THE LEFT | | | | | |
| 501 29 | | | | | | | |
| 501 28 | | | | | | | |
| 501 27 | 6 | SCREW | STEEL | | CK HD Ø 3.40 | 110.000 | |
| 501 26 | 1 | | | | | | |
| 501 25 | 1 | | | | | | |
| 501 24 | 2 | | | | | | |
| 501 23 | 2 | | | | | | |
| 501 22 | 6 | | | | | | |
| 501 21 | 2 | FAIRING SUPPORT | 2024 | T3 | 120 x 43 x 10 | 65.000 | |
| 501 20 | 2 | ELASTIC STOP | | | | | JPX |
| 501 19 | 4 | SPINDLE | 15CD4 | T | Ø 12 x 31 | 160.000 | |
| 501 18 | 2 | GUSSET | 15CD4 | | 35 x 35 x 1 | 110.000 | |
| 501 17 | 2 | STARTER DISC | 2024 | T3 | Ø 100 x 1.6 | 65.000 | |
| 501 16 | 2 | FRONT FLANGE | PLYWOOD | | Ø 444 x 5 | | 5 x 3 MM |
| 501 15 | 12 | | | | | | |
| 501 14 | 2 | REAR FLANGE | 2024 | T3 | Ø 160 x 1 | 65.000 | |
| 501 13 | 2 | EXTENSION | 2024 | | | | JPX |
| 501 12 | 2 | | | | | | |
| 501 11 | 2 | HUB PROPELLER | 2024 | | | | JPX |
| 501 10 | 2* | REAR FITTING | 2024 | T3 | 100 x 23 x 12 | 65.000 | or 10 |
| 501 09 | 8 | MOTOR SUSPENSION | PIANO WIRE | | Ø 3 x 175 | 250.000 | |
| 501 08 | 2 | | | | | | |
| 501 07 | 4 | LINKING BAR | 2024 | T3 | 571 x 40 x 8 | 65.000 | |
| 501 06 | 4 | SINGLE DUCK | 2024 | T3 | 45 x 15 x 12 | 65.000 | |
| 501 05 | 2 | DOUBLE DUCK | 2024 | T3 | 84 x 15 x 12 | 65.000 | |
| 501 04 | 2* | FITTING | 2024 | T3 | 207 x 49 x 12 | 65.000 | |
| 501 03 | 1 | CENTER MOUNTING | 15CD4 | | 95 x 35 x 2 | 110.000 | |
| 501 02 | 2* | SIDE MOUNTING | 15CD4 | | 83 x 56 x 2 | 110.000 | |
| 501 01 | 2* | T FITTING | 2424 | T4 | 249 x 54 x 26 x 4 | 65.000 | |

| Reference | Qty | Description | Material | Cond | Dimensions | Resist. | Comments |
|---|---|---|---|---|---|---|---|

CRICRI MC 15

TITLE : POWER PLANT GROUP – DETAILS

Scale : 1/1

Drawn by : Colomban
Date : 1982

Copyright © 1976 Michel COLOMBAN
This sheet is one of a set for the CRICRI MC 15 airplane intended for use by an amateur builder holding a valid license for construction of a single example of this aircraft. Any other use of this plan, in whole or in part, will be deemed fraudulent.

501

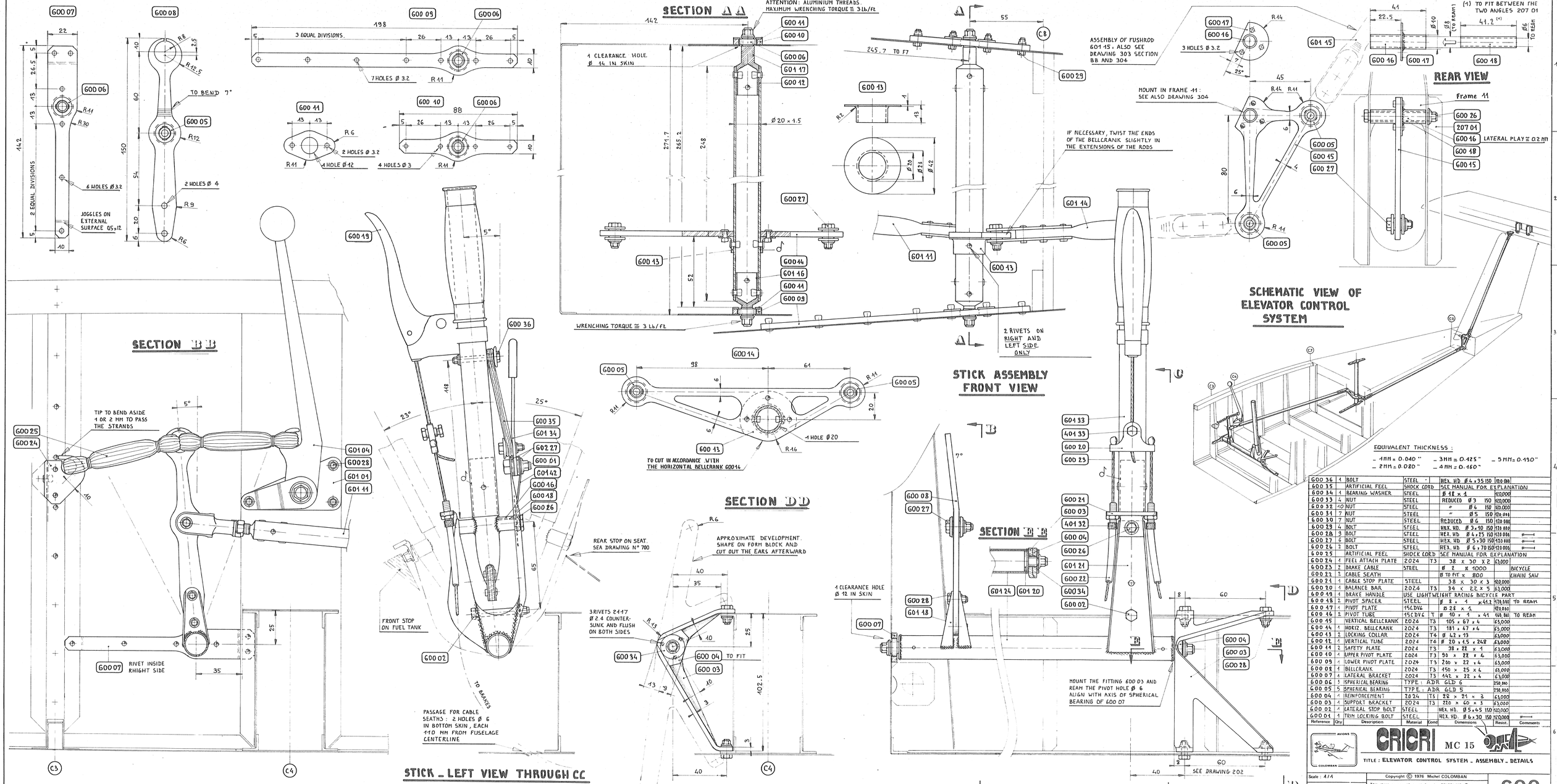


| Reference | Qty | Description | Material | Cond | Dimensions | Resist. | Comments |
|---|---|---|---|---|---|---|---|
| 600 36 | 1 | BOLT | STEEL | | HEX. HD Ø 6 x 35 150 | 120 000 | |
| 600 35 | | ARTIFICIAL FEEL | SHOCK CORD | | SEE MANUAL FOR EXPLANATION | | |
| 600 34 | 1 | BEARING WASHER | STEEL | | Ø 18 x 1 | 120000 | |
| 600 33 | 4 | NUT | STEEL | | REDUCED Ø 3 150 | 120,000 | |
| 600 32 | 40 | NUT | STEEL | | " Ø 6 150 | 120,000 | |
| 600 31 | 7 | NUT | STEEL | | " Ø 5 150 | 120 000 | |
| 600 30 | 7 | NUT | STEEL | | REDUCED Ø 6 150 | 120 000 | |
| 600 29 | 4 | BOLT | STEEL | | HEX. HD. Ø 3 x 10 150 | 120 000 | |
| 600 28 | 9 | BOLT | STEEL | | HEX. HD. Ø 4 x 25 150 | 120 000 | |
| 600 27 | 6 | BOLT | STEEL | | HEX. HD Ø 5 x 30 150 | 120 000 | |
| 600 26 | 2 | BOLT | STEEL | | HEX. HD Ø 6 x 70 150 | 120 000 | |
| 600 25 | | ARTIFICIAL FEEL | SHOCK CORD | | SEE MANUAL FOR EXPLANATION | | |
| 600 24 | 1 | FEEL ATTACH PLATE | 2024 | T3 | 38 x 30 x 2 | 63,000 | |
| 600 23 | 2 | BRAKE CABLE | STEEL | | Ø 2 x 1000 | | BICYCLE |
| 600 22 | 2 | CABLE SEATH | | | Ø 10 FIT x 800 | | CHAIN SAW |
| 600 21 | 1 | CABLE STOP PLATE | STEEL | | 38 x 30 x 3 | 120,000 | |
| 600 20 | 1 | BALANCE BAR | 2024 | T3 | 34 x 22 x 5 | 63,000 | |
| 600 19 | 1 | BRAKE HANDLE | USE LIGHTWEIGHT RACING BICYCLE PART | | | | |
| 600 18 | 2 | PIVOT SPACER | STEEL | | Ø 8 x 1 x 41.2 | 120,000 | TO REAM |
| 600 17 | 1 | PIVOT PLATE | 15CDV6 | | Ø 28 x 1 | 120 000 | |
| 600 16 | 2 | PIVOT TUBE | 15CDV6 | T | Ø 10 x 1 x 41 | 120 000 | TO REAM |
| 600 15 | | VERTICAL BELLCRANK | 2024 | T3 | 105 x 67 x 4 | 63,000 | |
| 600 14 | 1 | HORIZ. BELLCRANK | 2024 | T3 | 181 x 47 x 4 | 63,000 | |
| 600 13 | 2 | LOCKING COLLAR | 2024 | T4 | Ø 42 x 13 | 63,000 | |
| 600 12 | 1 | VERTICAL TUBE | 2024 | T4 | Ø 20 x 1.5 x 242 | 63,000 | |
| 600 11 | 2 | SAFETY PLATE | 2024 | T3 | 38 x 22 x 1 | 63,000 | |
| 600 10 | 1 | UPPER PIVOT PLATE | 2024 | T3 | 90 x 22 x 4 | 63,000 | |
| 600 09 | 1 | LOWER PIVOT PLATE | 2024 | T3 | 200 x 22 x 4 | 63,000 | |
| 600 08 | 1 | BELLCRANK | 2024 | T3 | 450 x 25 x 4 | 63,000 | |
| 600 07 | 1 | LATERAL BRACKET | 2024 | T3 | 441 x 22 x 4 | 63,000 | |
| 600 06 | 1 | SPHERICAL BEARING | TYPE : ADR GLD 6 | | | 250 000 | |
| 600 05 | 5 | SPHERICAL BEARING | TYPE : ADR GLD 5 | | | 250 000 | |
| 600 04 | 1 | REINFORCEMENT | 2024 | T3 | 28 x 24 x 3 | 63,000 | |
| 600 03 | 1 | SUPPORT BRACKET | 2024 | T3 | 220 x 60 x 3 | 63,000 | |
| 600 02 | 1 | LATERAL STOP BOLT | STEEL | | HEX. HD. Ø 5 x 65 150 | 120,000 | |
| 600 01 | 1 | TRIM LOCKING BOLT | STEEL | | HEX. HD. Ø 6 x 30 150 | 120,000 | |

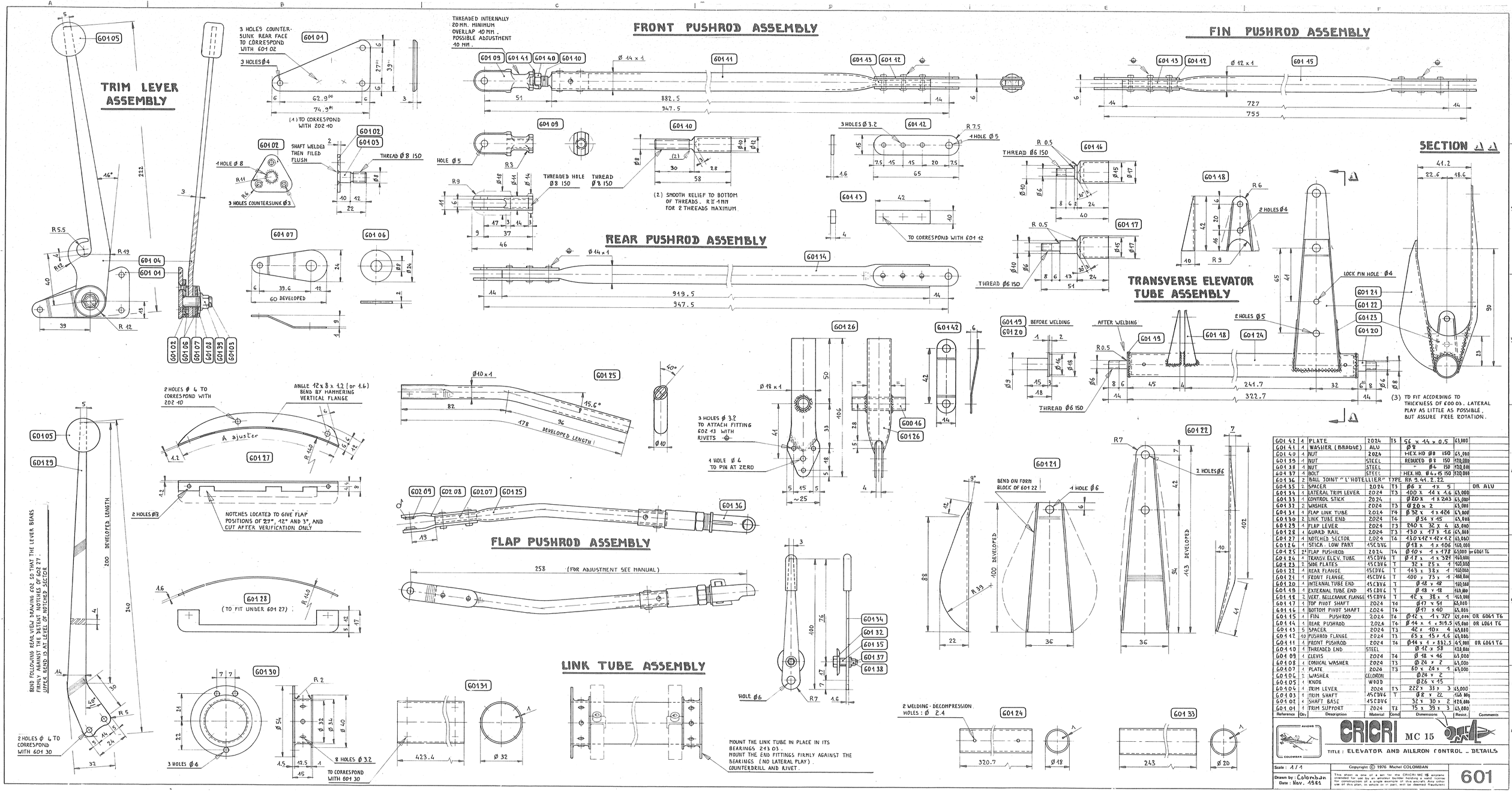


| Reference | Qty. | Description | Material | Cond | Dimensions | Resist. | Comments |
|---|---|---|---|---|---|---|---|
| 601 42 | 1 | PLATE | 2024 | T3 | 56 x 14 x 0.5 | 63,000 | |
| 601 41 | 1 | WASHER (BRAQUE) | ALU | | Ø 8 | | |
| 601 40 | 1 | NUT | 2024 | | HEX HD Ø8 150 | 63,000 | |
| 601 39 | 1 | NUT | STEEL | | REDUCED Ø 8 150 | 120,000 | |
| 601 38 | 1 | NUT | STEEL | | " Ø6 150 | 120,000 | |
| 601 37 | 1 | BOLT | STEEL | | HEX. HD. Ø 4 x 15 150 | 120,000 | |
| 601 36 | 2 | BALL JOINT "L'HOTELLIER" | TYPE RK 5.41.2.22 | | | | |
| 601 35 | 2 | SPACER | 2024 | T3 | Ø6 x 12 x 5 | | OR ALU |
| 601 34 | 1 | LATERAL TRIM LEVER | 2024 | T3 | 100 x 44 x 4.6 | 63,000 | |
| 601 33 | 1 | CONTROL STICK | 2024 | | Ø 20 x 1 x 243 | 63,000 | |
| 601 32 | 2 | WASHER | 2024 | T3 | Ø 20 x 2 | 63,000 | |
| 601 31 | 1 | FLAP LINK TUBE | 2024 | T4 | Ø 32 x 1 x 424 | 63,000 | |
| 601 30 | 2 | LINK TUBE END | 2024 | T4 | Ø 54 x 45 | 63,000 | |
| 601 29 | 1 | FLAP LEVER | 2024 | T3 | 240 x 32 x 4 | 63,000 | |
| 601 28 | 1 | GUARD RAIL | 2024 | T3 | 130 x 17 x 1.6 | 63,000 | |
| 601 27 | 1 | NOTCHED SECTOR | 2024 | T4 | 130 x 42 x 4.2 | 63,000 | |
| 601 26 | 1 | STICK - LOW PART | 15CDV6 | | Ø 18 x 1 x 106 | 140,000 | |
| 601 25 | 2* | FLAP PUSHROD | 2024 | T4 | Ø 10 x 1 x 178 | 63,000 | or 6061 T6 |
| 601 24 | 1 | TRANSV. ELEV. TUBE | 15CDV6 | T | Ø 18 x 1 x 324 | 140,000 | |
| 601 23 | 2 | SIDE PLATES | 15CDV6 | T | 32 x 25 x 1 | 140,000 | |
| 601 22 | 1 | REAR FLANGE | 15CDV6 | T | 143 x 38 x 1 | 140,000 | |
| 601 21 | 1 | FRONT FLANGE | 15CDV6 | T | 100 x 73 x 1 | 140,000 | |
| 601 20 | 1 | INTERNAL TUBE END | 15CDV6 | T | Ø 18 x 48 | 140,000 | |
| 601 19 | 1 | EXTERNAL TUBE END | 15 CDV6 | T | Ø 18 x 48 | 140,000 | |
| 601 18 | 2 | VERT. BELLCRANK FLANGE | 15 CDV6 | T | 42 x 38 x 1 | 140,000 | |
| 601 17 | 1 | TOP PIVOT SHAFT | 2024 | T4 | Ø 17 x 51 | 63,000 | |
| 601 16 | 1 | BOTTOM PIVOT SHAFT | 2024 | T4 | Ø 17 x 40 | 63,000 | |
| 601 15 | 1 | FIN PUSHROD | 2024 | T4 | Ø 12 x 1 x 727 | 63,000 | OR 6061 T6 |
| 601 14 | 1 | REAR PUSHROD | 2024 | T4 | Ø 14 x 1 x 919.5 | 63,000 | OR 6061 T6 |
| 601 13 | 5 | SPACER | 2024 | T3 | 42 x 10 x 4 | 63,000 | |
| 601 12 | 10 | PUSHROD FLANGE | 2024 | T3 | 65 x 15 x 1.6 | 63,000 | |
| 601 11 | 1 | FRONT PUSHROD | 2024 | T4 | Ø 14 x 1 x 882.5 | 63,000 | OR 6061 T6 |
| 601 10 | 1 | THREADED END | STEEL | | Ø 12 x 58 | 120,000 | |
| 601 09 | 1 | CLEVIS | 2024 | T4 | Ø 18 x 46 | 63,000 | |
| 601 08 | 1 | CONICAL WASHER | 2024 | T3 | Ø 24 x 2 | 63,000 | |
| 601 07 | 1 | PLATE | 2024 | T3 | 60 x 24 x 1 | 63,000 | |
| 601 06 | 5 | WASHER | CELORON | | Ø 24 x 2 | | |
| 601 05 | 1 | KNOB | WOOD | | Ø 26 x 15 | | |
| 601 04 | 1 | TRIM LEVER | 2024 | T3 | 222 x 39 x 3 | 63,000 | |
| 601 03 | 1 | TRIM SHAFT | 15CDV6 | T | Ø 8 x 22 | 140,000 | |
| 601 02 | 1 | SHAFT BASE | 15CDV6 | | 32 x 30 x 2 | 120,000 | |
| 601 01 | 1 | TRIM SUPPORT | 2024 | T3 | 75 x 39 x 3 | 63,000 | |

CRICRI MC 15

TITLE : ELEVATOR AND AILERON CONTROL _ DETAILS

Scale : 1/1

Drawn by : Colomban
Date : Nov. 1984

Copyright © 1976 Michel COLOMBAN

This sheet is one of a set for the CRICRI MC 15 airplane intended for use by an amateur builder holding a valid license for construction of a single example of this aircraft. Any other use of this plan, in whole or in part, will be deemed fraudulent.

601

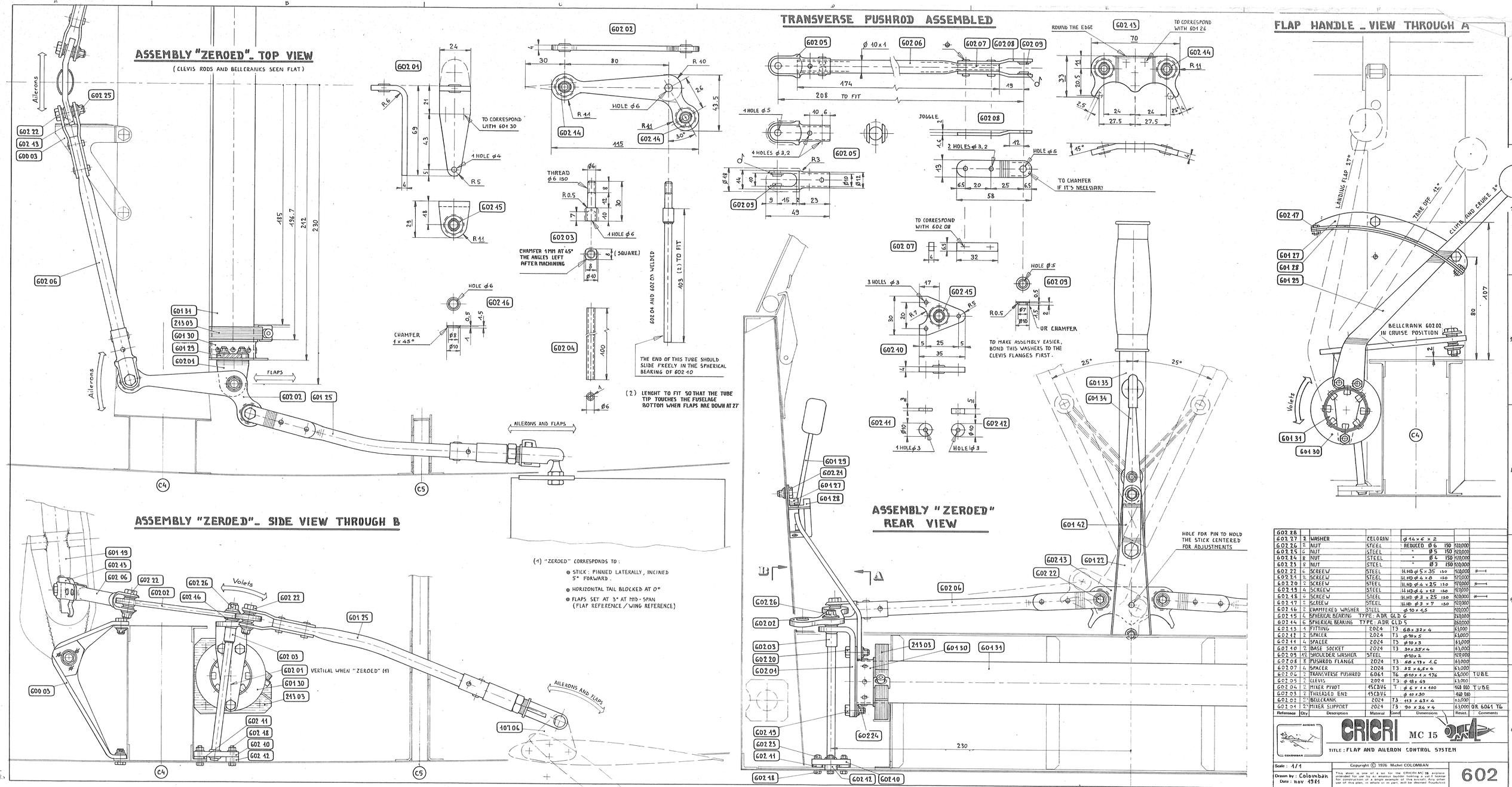


| Reference | Qty | Description | Material | Cond | Dimensions | Resist. | Comments |
|---|---|---|---|---|---|---|---|
| 602 28 | | | | | | | |
| 602 27 | 2 | WASHER | CELORON | | ⌀ 14 x 6 x 2 | | |
| 602 26 | 2 | NUT | STEEL | | REDUCED Ø 6 150 | 120,000 | |
| 602 25 | 6 | NUT | STEEL | | " Ø 5 150 | 120,000 | |
| 602 24 | 8 | NUT | STEEL | | " Ø 4 150 | 120,000 | |
| 602 23 | 8 | NUT | STEEL | | " Ø 3 150 | 120,000 | |
| 602 22 | 6 | SCREEW | STEEL | | H.HD ⌀ 5 x 35 150 | 120,000 | |
| 602 21 | 2 | SCREEW | STEEL | | H.HD ⌀ 4 x 8 150 | 120,000 | |
| 602 20 | 2 | SCREEW | STEEL | | H.HD ⌀ 4 x 25 150 | 120,000 | |
| 602 19 | 4 | SCREEW | STEEL | | H.HD ⌀ 4 x 12 150 | 120,000 | |
| 602 18 | 6 | SCREEW | STEEL | | H.HD ⌀ 3 x 25 150 | 120,000 | |
| 602 17 | 2 | SCREEW | STEEL | | H.HD ⌀ 3 x 7 150 | 120,000 | |
| 602 16 | 2 | CHAMFERED WASHER | STEEL | | ⌀ 10 x 4,5 | 120,000 | |
| 602 15 | 4 | SPHERICAL BEARING | TYPE: ADR GLD 6 | | | 240,000 | |
| 602 14 | 6 | SPHERICAL BEARING | TYPE: ADR GLD 5 | | | 260,000 | |
| 602 13 | 1 | FITTING | 2024 | T3 | 68 x 32 x 4 | 63,000 | |
| 602 12 | 2 | SPACER | 2024 | T3 | ⌀ 10 x 5 | 63,000 | |
| 602 11 | 4 | SPACER | 2024 | T3 | ⌀ 10 x 3 | 63,000 | |
| 602 10 | 2 | BASE SOCKET | 2024 | T3 | 30 x 35 x 4 | 63,000 | |
| 602 09 | 12 | SHOULDER WASHER | STEEL | | ⌀ 10 x 2 | 120,000 | |
| 602 08 | 8 | PUSHROD FLANGE | 2024 | T3 | 58 x 13 x 1,6 | 63,000 | |
| 602 07 | 6 | SPACER | 2024 | T3 | ⌀ 8 x 6,5 x 4 | 63,000 | |
| 602 06 | 2 | TRANSVERSE PUSHROD | 6061 | T6 | ⌀ 10 x 1 x 176 | 63,000 | TUBE |
| 602 05 | 2 | CLEVIS | 2024 | T3 | ⌀ 18 x 49 | 63,000 | |
| 602 04 | 2 | MIXER PIVOT | 4SCDV6 | T | ⌀ 6 x 1 x 100 | 460 000 | TUBE |
| 602 03 | 2 | THREADED END | 4SCDV6 | | ⌀ 10 x 30 | 460 000 | |
| 602 02 | 2* | BELLCRANK | 2024 | T3 | 113 x 43 x 4 | 63,000 | |
| 602 01 | 2* | MIXER SUPPORT | 2024 | T3 | 90 x 24 x 4 | 63,000 | OR 6061 T6 |

AVIONS CRICRI MC 15 COLOMBAN

TITLE: FLAP AND AILERON CONTROL SYSTEM

Scale: 1/1

Drawn by: Colomban
Date: NOV 1981

Copyright © 1976 Michel COLOMBAN
This sheet is one of a set for the CRICRI MC 15 airplane intended for use by an amateur builder holding a valid licence for construction of a single example of this aircraft. Any other use of this plan, in whole or in part, will be deemed fraudulent

602

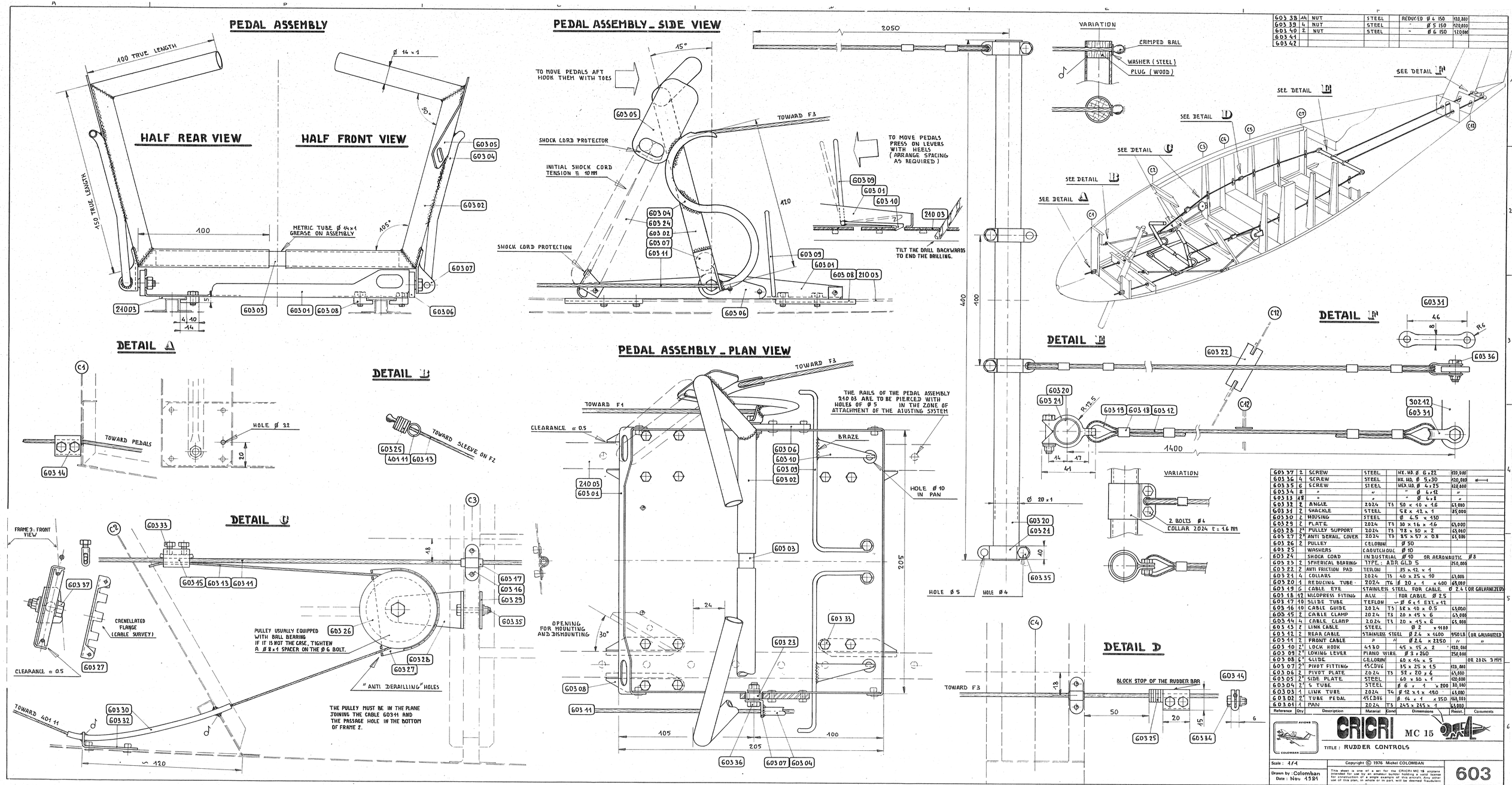


| Reference | Qty | Description | Material | Cond | Dimensions | Resist. | Comments |
|---|---|---|---|---|---|---|---|
| 603 38 | 44 | NUT | STEEL | | REDUCED Ø 4 150 | 120,000 | |
| 603 39 | 4 | NUT | STEEL | | Ø 5 150 | 120,000 | |
| 603 40 | 2 | NUT | STEEL | | " Ø 6 150 | 120,000 | |
| 603 41 | | | | | | | |
| 603 42 | | | | | | | |
| 603 37 | 2 | SCREW | STEEL | | HX. HD. Ø 6 x 22 | 120,000 | |
| 603 36 | 4 | SCREW | STEEL | | HX. HD. Ø 5 x 30 | 120,000 | |
| 603 35 | 6 | SCREW | STEEL | | HEX. HD. Ø 4 x 25 | 120,000 | |
| 603 34 | 8 | " | " | | " Ø 4 x 12 | " | |
| 603 33 | 48 | " | " | | " Ø 4 x 8 | " | |
| 603 32 | 2 | ANGLE | 2024 | T3 | 50 x 10 x 1.6 | 65,000 | |
| 603 31 | 2 | SHACKLE | STEEL | | 5 x 12 x 1 | 85,000 | |
| 603 30 | 2 | HOUSING | STEEL | | Ø 4.5 x 150 | | |
| 603 29 | 2 | PLATE | 2024 | T3 | 30 x 16 x 1.6 | 65,000 | |
| 603 28 | 24 | PULLEY SUPPORT | 2024 | T3 | 78 x 30 x 2 | 65,000 | |
| 603 27 | 2 | ANTI DERAIL COVER | 2024 | T3 | 85 x 57 x 0.8 | 65,000 | |
| 603 26 | 2 | PULLEY | CELORAN | | Ø 50 | | |
| 603 25 | | WASHERS | CAOUTCHOUC | | Ø 10 | | |
| 603 24 | | SHOCK CORD | INDUSTRIAL | | Ø 10 OR AERONAUTIC | | Ø 8 |
| 603 23 | 2 | SPHERICAL BEARING | TYPE : ADR GLD 5 | | | 250,000 | |
| 603 22 | 2 | ANTI FRICTION PAD | TEFLON | | 35 x 12 x 1 | | |
| 603 21 | 4 | COLLARS | 2024 | T3 | 40 x 25 x 10 | 65,000 | |
| 603 20 | 1 | REDUCING TUBE | 2024 | T6 | Ø 20 x 1 x 400 | 65,000 | |
| 603 19 | 6 | CABLE EYE | STAINLESS STEEL FOR CABLE | | | Ø 2.4 | (OR GALVANIZED) |
| 603 18 | 12 | NICOPRESS FITTING | ALU. | | FOR CABLE Ø 2.5 | | |
| 603 17 | 10 | SLIDE TUBE | TEFLON | | ~ Ø 6 x 1 EXT. x 12 | | |
| 603 16 | 10 | CABLE GUIDE | 2024 | T3 | 38 x 10 x 0.5 | 65,000 | |
| 603 15 | 2 | CABLE CLAMP | 2024 | T3 | 20 x 15 x 6 | 65,000 | |
| 603 14 | 4 | CABLE CLAMP | 2024 | T3 | 20 x 15 x 6 | 65,000 | |
| 603 13 | 2 | LINK CABLE | STEEL | | Ø 2 x 1400 | | |
| 603 12 | 2 | REAR CABLE | STAINLESS STEEL | | Ø 2.4 x 1400 | 950 LB | (OR GALVANIZED) |
| 603 11 | 2 | FRONT CABLE | " | " | Ø 2.4 x 2250 | " | " |
| 603 10 | 24 | LOCK HOOK | 4130 | | 45 x 15 x 2 | 120,000 | |
| 603 09 | 24 | LOCKING LEVER | PIANO WIRE | | Ø 3 x 260 | 250,000 | |
| 603 08 | 6 | SLIDE | CELORAN | | 60 x 14 x 5 | | (OR 2024 3 MM) |
| 603 07 | 24 | PIVOT FITTING | 15CDV6 | | 35 x 25 x 1.5 | 120,000 | |
| 603 06 | 2 | PIVOT PLATE | 2024 | T3 | 52 x 20 x 4 | 65,000 | |
| 603 05 | 24 | SIDE PLATE | STEEL | | 60 x 30 x 1 | 120,000 | |
| 603 04 | 24 | S TUBE | STEEL | | Ø 6 x 1 x 200 | 80,000 | |
| 603 03 | 1 | LINK TUBE | 2024 | T4 | Ø 12 x 1 x 190 | 65,000 | |
| 603 02 | 24 | TUBE PEDAL | 15CDV6 | | Ø 14 x 1 x 350 | 140,000 | |
| 603 01 | 4 | PAN | 2024 | T3 | 245 x 235 x 1 | 65,000 | |

CRICRI MC 15

TITLE : RUDDER CONTROLS

Scale : 1/1

Drawn by : Colomban
Date : Nov 1984

Copyright © 1976 Michel COLOMBAN
This sheet is one of a set for the CRICRI MC 15 ultralight intended for use by an amateur builder wishing to undertake for construction of a single example of this aircraft. Any other use of this plan, in whole or in part, will be deemed fraudulent.

603

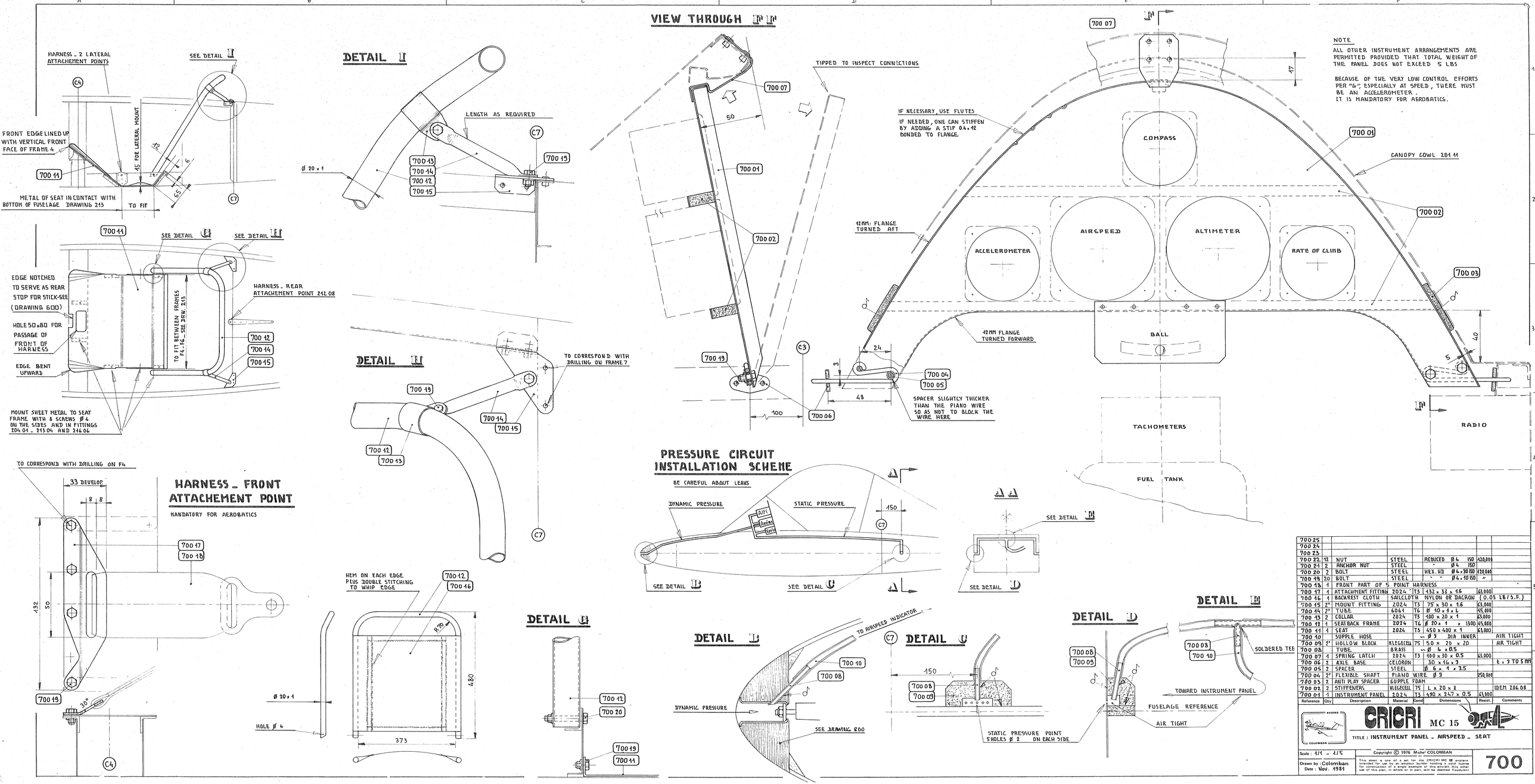


| Reference | Qty | Description | Material | Cond | Dimensions | Resist. | Comments |
|---|---|---|---|---|---|---|---|
| 700 25 | | | | | | | |
| 700 24 | | | | | | | |
| 700 23 | | | | | | | |
| 700 22.12 | | NUT | STEEL | | REDUCED Ø 4 ISO | 420.000 | |
| 700 21 | 2 | ANCHOR NUT | STEEL | | " Ø 4 ISO | | |
| 700 20 | 2 | BOLT | STEEL | | HEX. HD Ø 4 x 30 ISO | 420.000 | |
| 700 19 | 20 | BOLT | STEEL | | " " Ø 4 x 10 ISO " | | |
| 700 18 | 4 | FRONT PART OF 5 POINT HARNESS | | | | | |
| 700 17 | 4 | ATTACHMENT FITTING | 2024 | T3 | 432 x 32 x 4.6 | 63.000 | |
| 700 16 | 4 | BACKREST CLOTH | SAILCLOTH | | NYLON OR DACRON | (0.03 LB/S.F.) | |
| 700 15 | 2* | MOUNT FITTING | 2024 | T3 | 75 x 30 x 1.6 | 63.000 | |
| 700 14 | 2* | TUBE | 6061 | T6 | Ø 10 x 1 x L | 45.000 | |
| 700 13 | 2 | COLLAR | 2024 | T3 | 400 x 20 x 1 | 63.000 | |
| 700 12 | 4 | SEATBACK FRAME | 2024 | T6 | Ø 20 x 1 x 1300 | 45.000 | |
| 700 11 | 4 | SEAT | 2024 | T3 | 450 x 400 x 1 | 63.000 | |
| 700 10 | | SUPPLE HOSE | | | ~ Ø 3 DIA INNER | | AIR TIGHT |
| 700 09 | 2* | HOLLOW BLOCK | KLEGECEL | 75 | 50 x 20 x 20 | | AIR TIGHT |
| 700 08 | | TUBE | BRASS | | ~ Ø 4 x 0.5 | | |
| 700 07 | 4 | SPRING LATCH | 2024 | T3 | 400 x 30 x 0.5 | 63.000 | |
| 700 06 | 2 | AXLE BASE | CELORON | | 30 x 46 x 3 | | L = 9 TO 5 MM |
| 700 05 | 2 | SPACER | STEEL | | Ø 6 x 1 x 3.5 | | |
| 700 04 | 2* | FLEXIBLE SHAFT | PIANO WIRE | | Ø 3 | 250.000 | |
| 700 03 | 2 | ANTI PLAY SPACER | SUPPLE FOAM | | | | |
| 700 02 | 2 | STIFFENERS | KLEGECEL | 75 | L x 20 x 2 | | IDEM 206.08 |
| 700 01 | 4 | INSTRUMENT PANEL | 2024 | T3 | 490 x 247 x 0.5 | 63.000 | |

AVIONS COLOMBAN

CRICRI MC 15

TITLE : INSTRUMENT PANEL _ AIRSPEED _ SEAT

Scale : 1/1 _ 1/5

Drawn by : Colomban

Date : Nov. 1984

Copyright © 1976 Michel COLOMBAN

This sheet is one of a set for the CRICRI MC 15 airplane. Its possession does not entitle the owner to build or have built for construction of a single example of this aircraft. Any other use of this plan, in whole or in part, will be deemed fraudulent.

700

| | | | | | | | |
|---|---|---|---|---|---|---|---|
| 800 31 | 2 | SCOOP | 2024 | T3 | 100 x 104 x 0.5 | 65,000 | |
| 800 32 | 4 | STIFFENER . WEB | KLEGECELL | T5 | 440 x 12 x 8 | | |
| 800 33 | 4 | STIFFENER . CAP | 2024 | T3 | 440 x 8 x 0.5 | 65,000 | |
| 800 34 | 2 | SMALL BAR | 2024 | T3 | 56 x 40 x 1 | 65,000 | |
| 800 35 | 1 | AIR EXIT | 2024 | T3 | 170 x 150 x 0.4 | 65,000 | |
| 800 36 | 1 | FUEL TANK | FIBERGLASS | | 520 x 420 x 265 | | ≈ 6.1 US GAL. |
| 800 37 | 1 | PLUG TANK | | | | | |
| 800 38 | 1 | TANK AIR DUCT | RILSAN TUBE ≈ Ø3 | | IN. | | |
| 800 39 | 2 | FUEL TAP | (FROM AUTOCYCLE) | | | | |
| 800 40 | 1 | FITTING | 2024 | T5 | 75 x 42 x 3 | 65,000 | |
| 800 41 | 1 | GASKET | SYNTHETIC RUBBER | | t = 1 or 2 MM | | |
| 800 42 | 2 | PICK-UP TUBE | SYNTHETIC RUBBER (NOT HARDENING IN FUEL) | | | | Ø 3 TO 4 INNER |
| 800 43 | 1 | FRONT FITTING | 2024 | T3 | 70 x 16 x 2 | 65,000 | |
| 800 44 | 1 | FRONT FITTING | 2024 | T3 | 56 x 16 x 2 | 65,000 | |
| 800 45 | 2 | SIDE FITTING | 2024 | T3 | 55 x 16 x 2 | 65,000 | |
| 800 46 | 2 | THREADED SHANK | STEEL | | Ø 4 x 70 ISO | 90,000 | |
| 800 47 | 5 | SCREW | STEEL | | HEX. HD Ø 4 x 12 ISO | 120,000 | |
| 800 48 | 7 | NUT | STEEL | | REDUCED Ø 4 ISO | 120,000 | |
| 800 49 | 1 | FUEL FILLER | | | | | |
| 800 50 | 2 | FUEL LINE | NYLON OR RILSAN TUBE . INNER | | | | Ø 3 TO 4 MM |
| 800 51 | 1 | NOSE MOUNTING | 2024 | T3 | 560 x 20 x 0.5 | 65,000 | |
| | | | | | | | |
| | | | | | | | |

## NOSE
(SCALE 1 AND 1/2.)

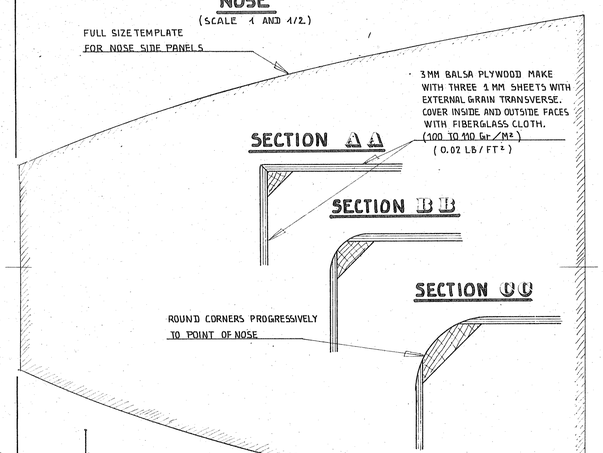





## DETAIL

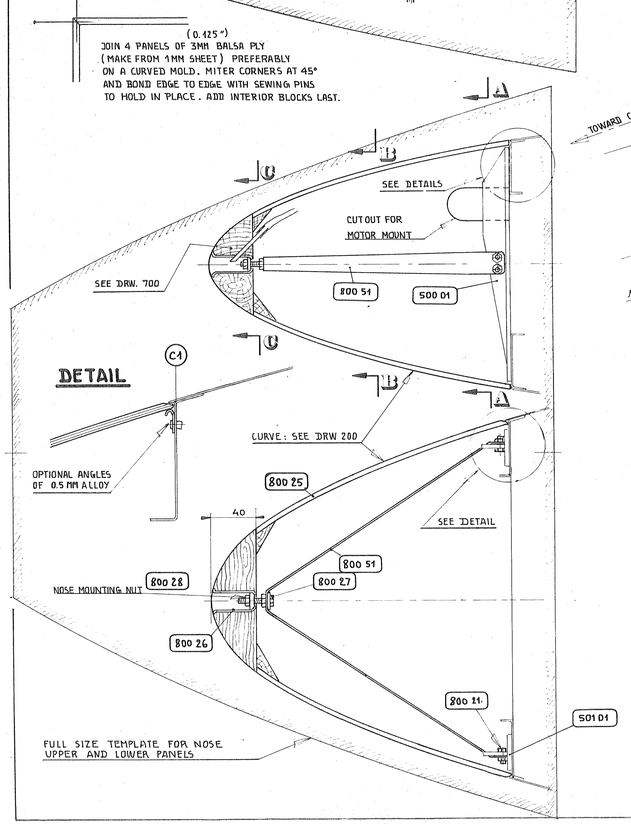


## VENTILATION AIR INTAKE
(SCALE 1/2)

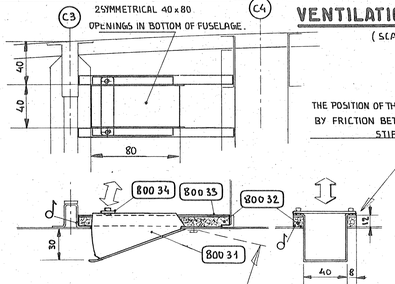


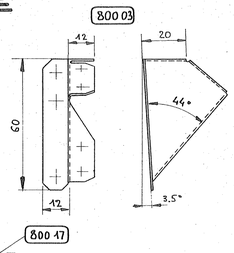


## VENTILATION . EXHAUST
(HALF SIZE)

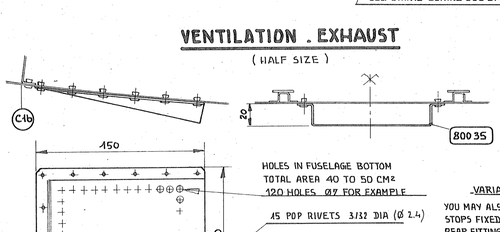


VARIANT.
YOU MAY ALSO MAKE HOUSING STOPS FIXED TO THE SIDE OF REAR FITTING 50MM (LEFT MOTOR) AND ON THE FRONT FACE OF THE CRANKCASE (RIGHT MOTOR.)

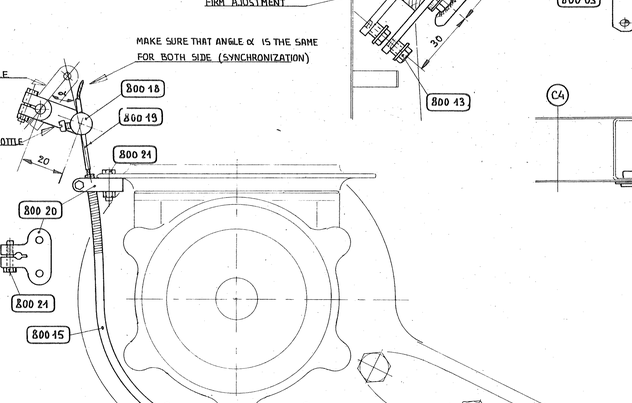


## ENGINE CONTROLS
(SCALE 1/1)

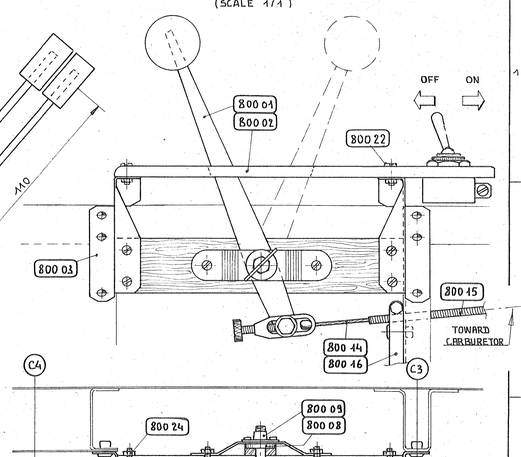


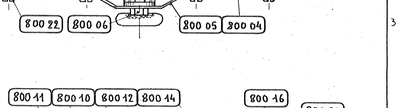


## FUEL TANK
(SCALE 1/1 AND 1/5)

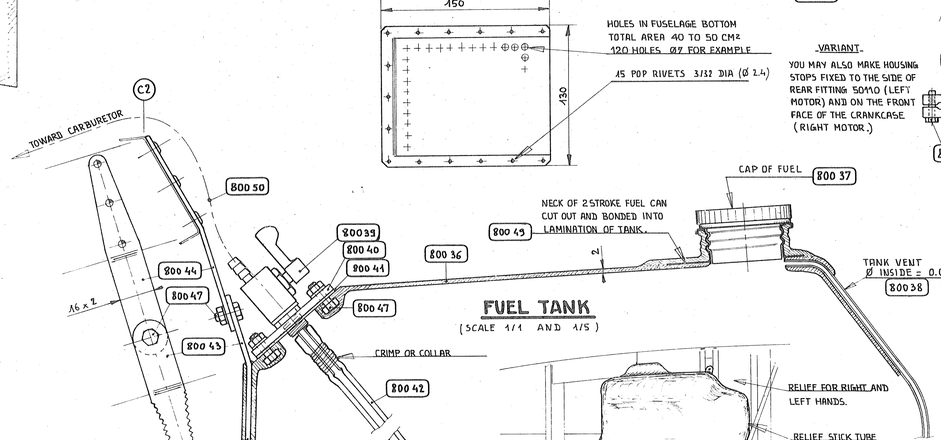


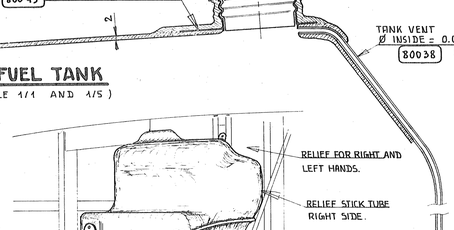


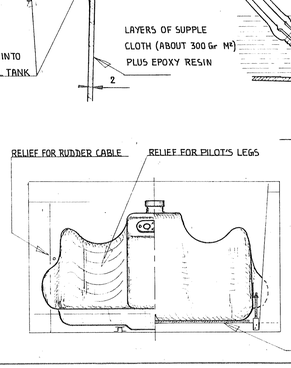


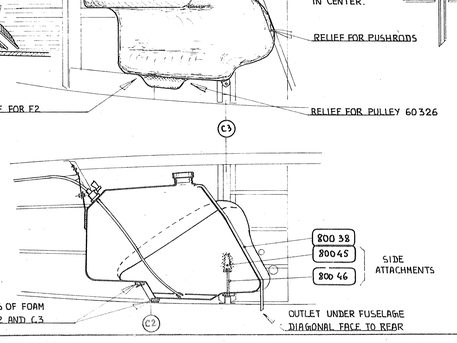


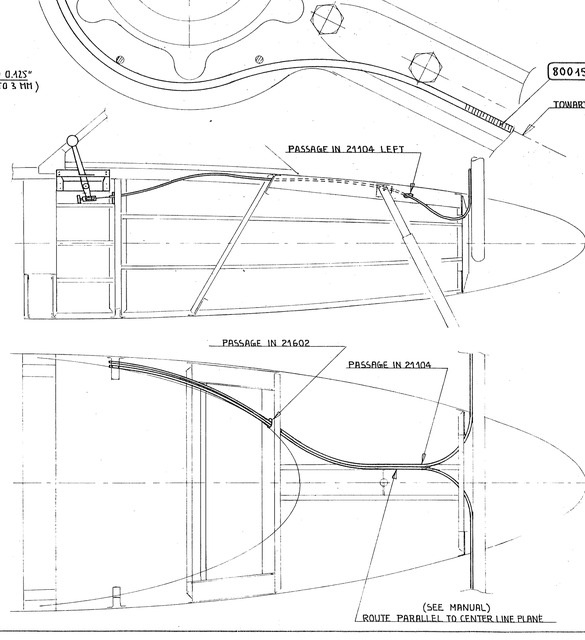


| Reference | Qty | Description | Material | Cond | Dimensions | Resist. | Comments |
|---|---|---|---|---|---|---|---|
| 800 26 | 6 | NUT | STEEL | | REDUCED Ø4 ISO | 120,000 | |
| 800 27 | 4 | SCREW | STEEL | | HEX. HD. Ø 4 x 30 ISO | 120,000 | |
| 800 26 | 4 | INLET DYNAM. PRESS. | SOGE | | Ø 16 TO 20 x 1 x 50 | 35,000 | |
| 800 25 | 1 | NOSE | BALSA | | THK ≈ 3 MM OR FIBERGLASS T: 0.6 - 0.8 | | |
| 800 24 | 44 | NUT | STEEL | | Ø 2 | 85,000 | |
| 800 23 | 10 | NUT | STEEL | | REDUCED Ø3 ISO | 120,000 | |
| 800 22 | 44 | SCREW | STEEL | | Ø 2 x 16 | 85,000 | |
| 800 21 | 14 | SCREW | STEEL | | HEX. HD. Ø 3 x 10 ISO | 120,000 | |
| 800 20 | 2 | STOP FITTING | 2024 | T3 | 26 x 22 x 6 | 65,000 | |
| 800 19 | 2 | LITTLE TUBE | RILSAN OR NYLON (LIGHTLY RIGID) | | | | |
| 800 18 | 2 | CABLE BLOC | SUPPLIED WITH THE CARBURETOR | | | | |
| 800 17 | 2 | LEVER THROTTLE | STEEL | | 55 x 10 x 4 | 85,000 | |
| 800 16 | 4 | STOP FITTING | 2024 | T3 | 34 x 20 x 6 | 65,000 | |
| 800 15 | 2 | BOWDEN | | | } SELF LUBRICATING CABLE | | |
| 800 14 | 2 | CABLE EXTRA SUPPLE (STEEL) | | | | | |
| 800 13 | 2 | SCREW | STEEL | | HEX. HD. 4 x 10 ISO | 120,000 | |
| 800 12 | 2 | SPACER | STEEL | | Ø 6 x 1 x 4.3 | 120,000 | |
| 800 11 | 2 | SCREW | STEEL | | Ø 3 x 18 ISO | 85,000 | |
| 800 10 | 2 | TENSIONER | 2024 | T3 | 27 x 10 x 4 | 65,000 | |
| 800 09 | 1 | ANCHOR NUT | STEEL | | REDUCED Ø 6 ISO | 120,000 | |
| 800 08 | 2 | FRICTION WASHER | CELORON | | Ø 14 x 4 t = 2 | | |
| 800 07 | 2 | WASHER | 2024 | T3 | Ø 10 x 4 x 1 | 65,000 | |
| 800 06 | 1 | LOCK SCREW | STEEL | | HEX. HD. Ø 6 x 40 ISO | 120,000 | |
| 800 05 | 2 | FITTING | 2024 | T3 | 70 x 14 x 0.5 | 65,000 | |
| 800 04 | 1 | THROTTLE SUPPORT | POPLAR | | 150 x 25 x 10 | | |
| 800 03 | 2? | CONSOLE | 2024 | T3 | 72 x 60 x 0.5 | 65,000 | |
| 800 02 | 1 | TABLET | PLYWOOD | | 175 x 40 x 5 | | |
| 800 01 | 2 | THROTTLE | 2024 | T3 | 150 x 14 x 3 | 65,000 | |

AVIONS COLOMBAN

CRICRI MC 15

TITLE: NOSE . VENTILATION . FUEL TANK . ENGINE CONTROLS .

Scale: A . 1/2 . 1/5

Copyright © 1976 Michel COLOMBAN

Drawn by: Colomban
Date: FEV 1982

This sheet is one of a set for the CRICRI MC 15 airplane intended for use by an amateur builder holding a valid license for construction of a single example of this aircraft. Any other use of this plan, in whole or in part, will be deemed fraudulent

800

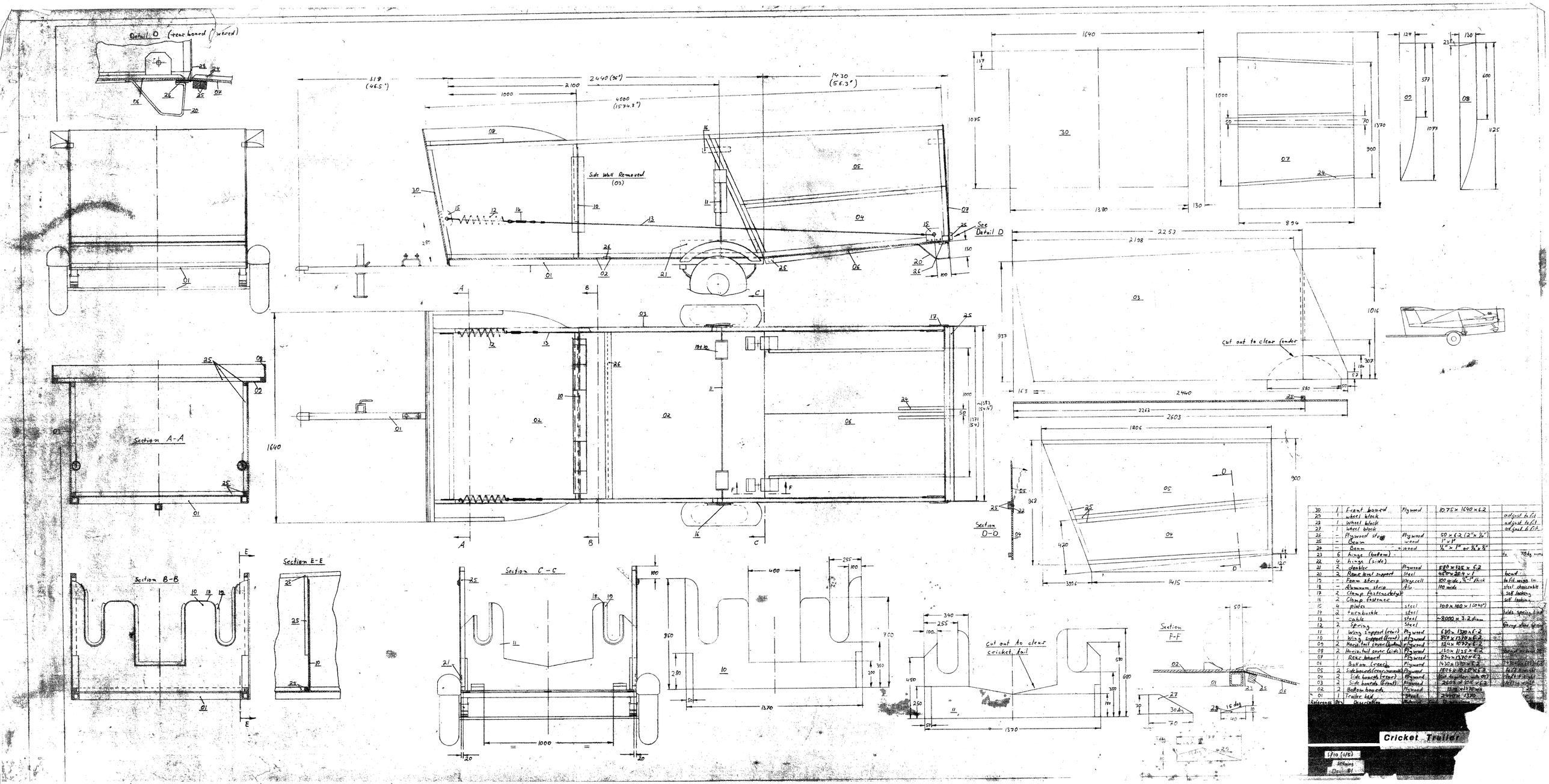


| | | | | | |
|---|---|---|---|---|---|
| 30 | 1 | Front board | Plywood | 1075 × 1640 × 6.2 | |
| 29 | 1 | wheel block | | | adjust to fit |
| 28 | 1 | wheel block | | | adjust to fit |
| 27 | 1 | wheel block | | | adjust to fit |
| 26 | – | Plywood strip | Plywood | 50 × 6.2 (2" × ¼") | |
| 25 | – | Beam | wood | 1" × 1" | |
| 24 | – | Beam | wood | ¾" × 1" or ⅝" × ⅝" | |
| 23 | 6 | hinge (bottom) | | | to 7/8 dia rod |
| 22 | 4 | hinge (side) | | | |
| 21 | 2 | doubler | Plywood | 580 × 125 × 6.2 | |
| 20 | 2 | Rear axel support | steel | 420 × 254 × 4 | bend |
| 19 | – | Foam strip | Ethycell | 100 wide, ¾" thick | to fill wings to |
| 18 | – | Aluminum strip | Alu | 100 wide | steel channels |
| 17 | 2 | Clamp fastener (left) | | | self locking |
| 16 | 2 | Clamp fastener | | | self locking |
| 15 | 4 | plate | steel | 100 × 100 × 1 (0.40") | |
| 14 | 2 | turnbuckle | steel | | sides spring |
| 13 | – | cable | steel | ~8000 × 3.2 dia | |
| 12 | 2 | Spring | steel | | Strong short spring |
| 11 | 1 | Wing support (rear) | Plywood | 580 × 1320 × 6.2 | |
| 10 | 1 | Wing support (front) | Plywood | 350 × 1320 × 6.2 | |
| 09 | 2 | Hatch tail cover (bottom) | Plywood | 124 × 1077 × 6.2 | |
| 08 | 2 | Hatch tail cover (side) | Plywood | 130 × 1125 × 6.2 | |
| 07 | 1 | Rear board | Plywood | 894 × 1370 × 6.2 | |
| 06 | 1 | Bottom (rear) | Plywood | 1430 × 1370 × 6.2 | |
| 05 | 2 | Sideboards (rear, inner) | Plywood | 1806 × 420 × 6.2 | fit of wheels |
| 04 | 2 | Side boards (rear) | Plywood | (bot together sch 09) | fit of wheels |
| 03 | 2 | Side boards (front) | Plywood | 2603 × 1016 × 6.2 | fit of wheels |
| 02 | 2 | Bottom boards | Plywood | 2440 × 1370 × 6.2 | |
| 01 | 1 | Trailer frame | steel | 2440 × 1370 | |
| Reference No. | | Description | | | |