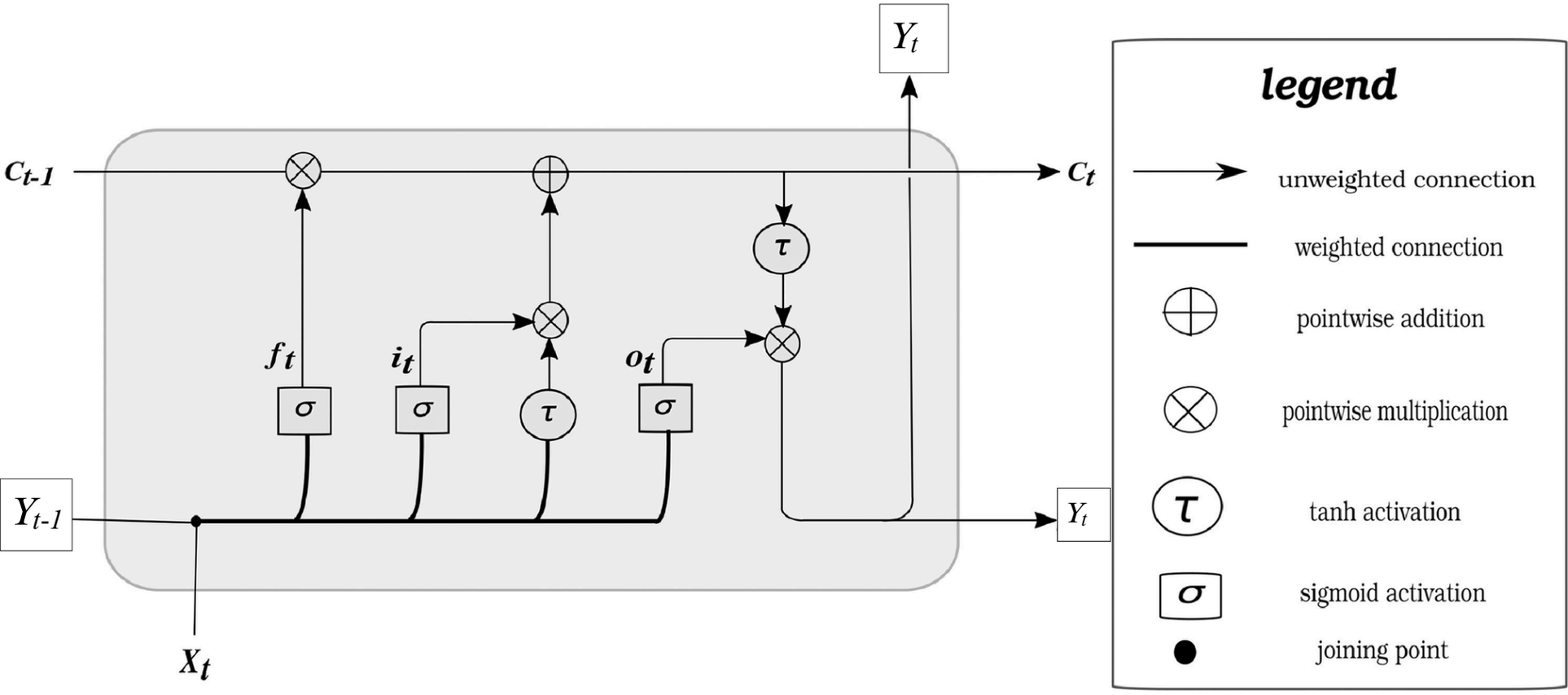
Y_t
c_{t-1}
c_t
f_t
i_t
o_t
σ
τ
Y_{t-1}
Y_t
X_t
legend
unweighted connection
weighted connection
pointwise addition
pointwise multiplication
tanh activation
sigmoid activation
joining point