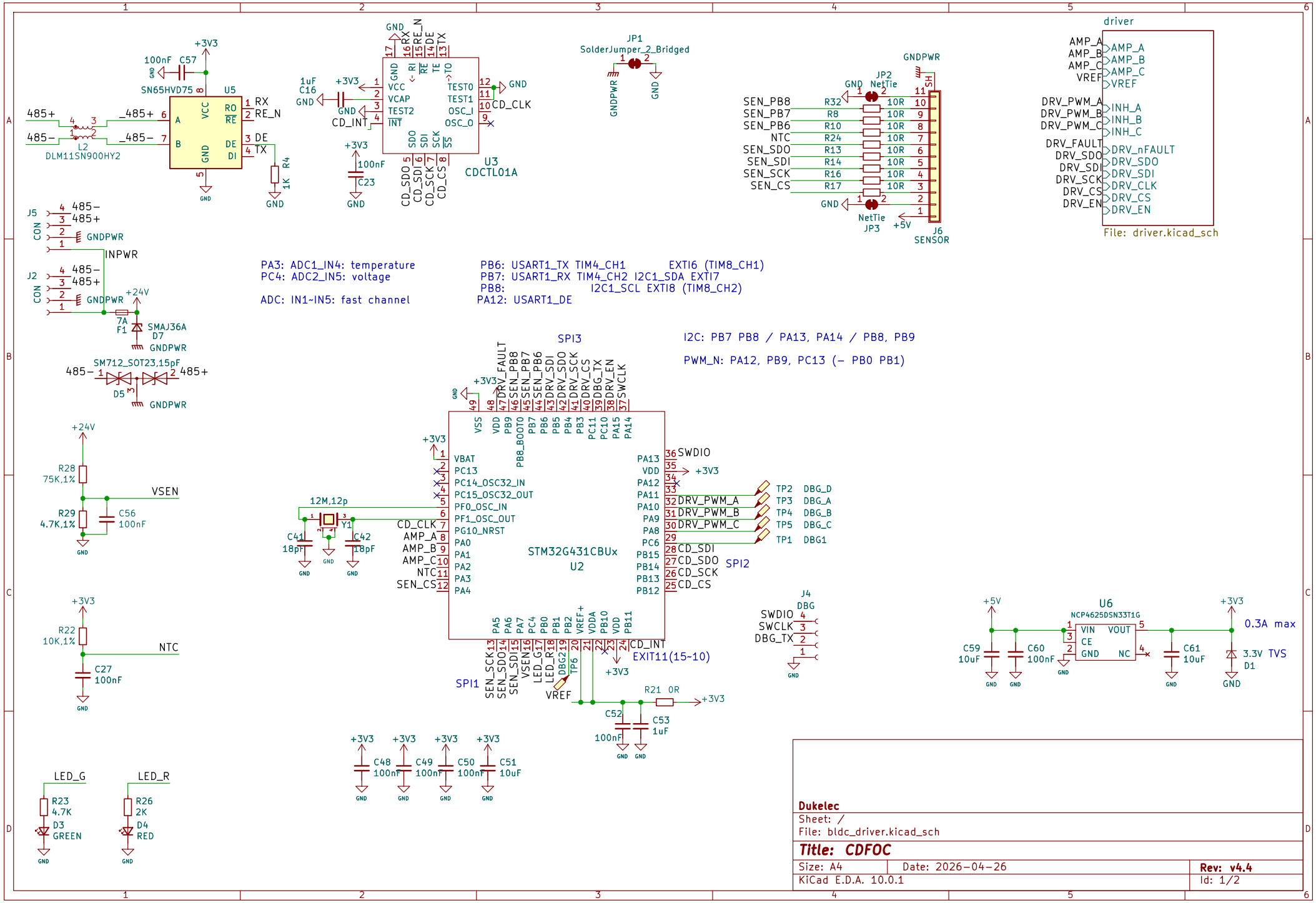

Dukelec

Sheet: /

File: bldc_driver.kicad_sch

Title: CDFOC

Size: A4	Date: 2026-04-26	**Rev: v4.4**
KiCad E.D.A. 10.0.1		Id: 1/2

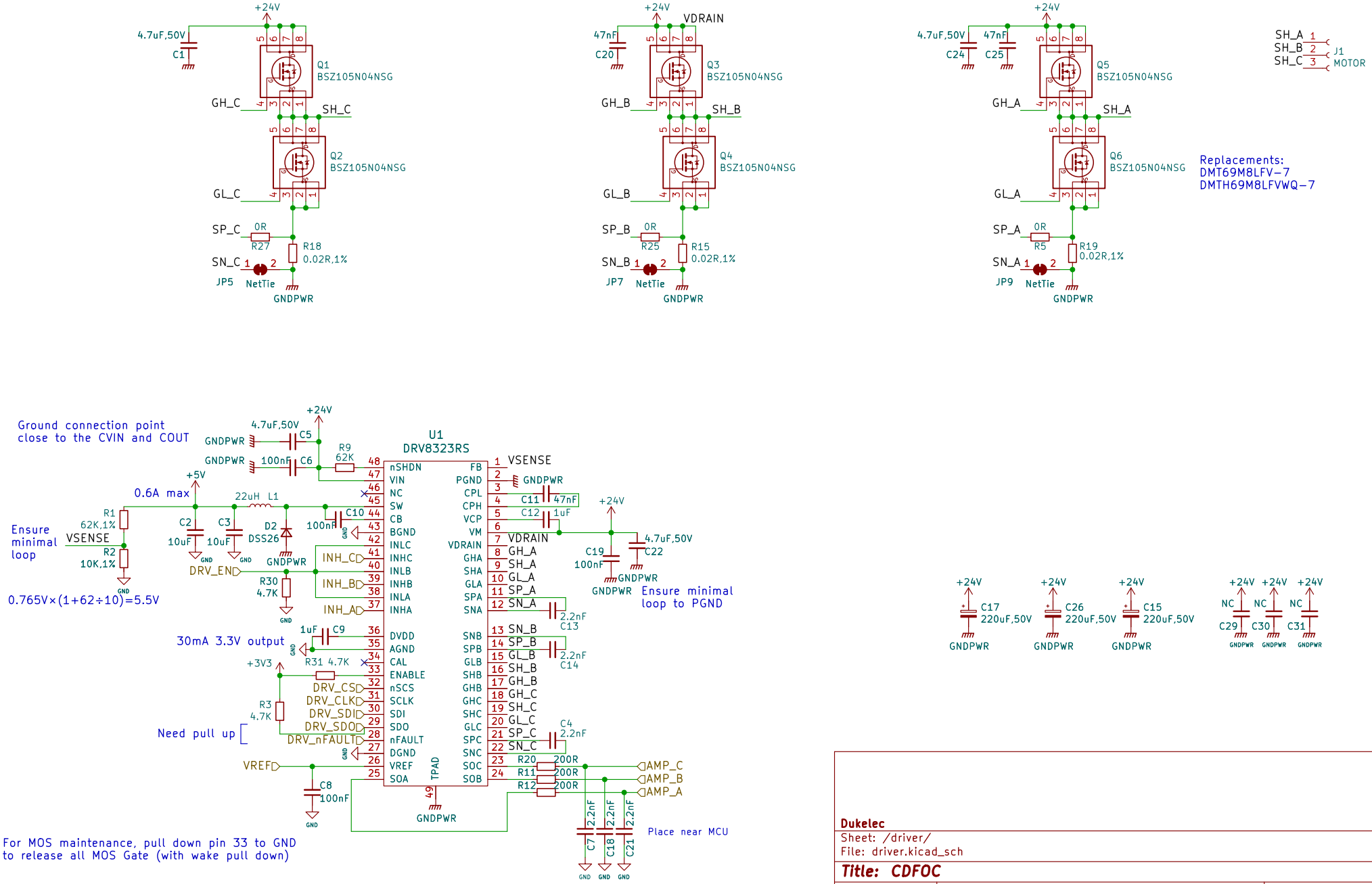

Dukelec

Sheet: /driver/

File: driver.kicad_sch

Title: CDFOC

Size: A4	Date: 2026-04-26	**Rev: v4.4**
KiCad E.D.A. 10.0.1		Id: 2/2