Distributed Identification of Power System Network Branch Events

Dulip Madurasinghe[1], *Student Member, IEEE,* Paranietharan Arunagirinathan[1], *Student Member, IEEE,*
Ganesh K. Venayagamoorthy[1,2], *Senior Member, IEEE,*
[1]Real-Time Power and Intelligent Systems Laboratory
Holcombe Department of Electrical and Computer Engineering, Clemson University, Clemson, SC 29634, USA
[2]School of Engineering, University of Kwazulu-Natal, Durban 4041, South Africa
Emails: dtmadurasinghe@ieee.org, parani@ieee.org and gkumar@ieee.org

***Abstract*—Online identification of power system network branches is critical in modern electric power system operation. Availability of phasor measurement units (PMUs) can be used to identify branch events. Due to complexity of the power system, a distributed cellular computational network (CCN) is proposed. Comparison of centralized and distributed neural network based power system network branch events identification is studied. IEEE 12-bus benchmark power system is simulated on real-time digital simulator platform for this study. CCN based distributed neural network approach is computationally efficient compared to centralized approach.**

***Index Terms*—Cellular Computational Network, Neural Networks, Phasor Measurement Units, Real-time Digital Simulator, Transmission Network Branch Events**

I. Introduction

Power system becomes a major focus in research for the past few decades. The electric power grid is the critical infrastructure of all infrastructures. New developments of other infrastructures adds complexity for the power demand. To satisfy these complex and dynamic demands, traditional power system is being changed. Traditional power system is upgraded to a modern power system with addition of renewable, demand response (DR) programs, distributed energy resources , intelligent controls and high speed communication back-born connects all nodes. Still the storage technology is not up-to the level. Thus, the grid is responsible of balancing the demand and losses with generation in real-time. Apart from that, Computation burden is increased with all the information flowing in for analysis from latest integration of smart sensors, advance metering infrastructures, DRs, electric vehicle charging, etc. Introduction of Phasor Measurement Units (PMUs) assists in implementing an efficient power network monitoring system [1]. PMU collects voltage, current phasor, frequency and rate of change of frequency data at a higher rate of 30Hz, up to 240Hz in the latest versions. These measurements are synchronized with time using the Global Positioning System (GPS). These time-tagged measurements transmitted to the Phasor Data Concentrator (PDC). These synchronized measurements of the geographically distributed power system is highly useful in data analytics and intelligent decision making. Intelligent decisions based controls are implemented to control the dynamics in the power system to maintain the reliable & quality power supply.

Transmission network is the intermediate connection between generation and distribution. Bulk power delivery depends on the reliable transmission network. In time identification of transmission network branch events is crucial in restoration and rerouting the power to avoid any system failures. All these branches are equipped with relays that will notify if, an event occurs in the branch. But having a redundant method of online event identification based on the PMU measurements is always an advantage. PMUs are already in use and implementing in the network. Use of available PMU measurements for identification of branch events is practically feasible.

The power system is evolving into a complex, non-linear system. Traditional linear mathematical approaches are not effective in solving power system problems [2]. As a result, Application of Artificial Intelligence (AI) in power system is emerged several decades ago to solve more complex problems [3]. Artificial Neural Network (ANN) is one popular technique under AI. Basic single, centralized neural network is efficient for real-time applications when it comes to smaller systems. If we consider largely distributed application like power system, system decentralization is a promising solution. Computational load can be distributed among several clients under specific clustering approach and the efficiency can be improved. The Cellular Computational Network (CCN) is such an architecture [4].

The available PMU measurements are used for identifying events in the transmission network. This can be used to verify the existing relay signal based event identification. In this study centralized single neural network and CCN based distributed neural network approaches are applied on IEEE 12-bus benchmark power system [5] simulated on real-time digital simulator (RTDS).

In the paper, Section II, background of the study is explained. Section III, experiment of branch event identification with single neural network and cellular multilayer perceptron network architectures is expressed. Section IV, results of

This work is supported in part by the US National Science Foundation (NSF) under grants 1408141, 1312260, 1738902 and 1544910 and the Duke Energy Distinguished Professor Endowment Fund.

Any opinions, findings and conclusions or recommendations expressed in this material are those of the author(s) and do not necessarily reflect the views of National Science Foundation and Duke Energy.

978-1-7281-5508-1/20/$31.00 ©2020 IEEE
Authorized licensed use limited to: CLEMSON UNIVERSITY. Downloaded on April 17,2026 at 19:27:53 UTC from IEEE Xplore. Restrictions apply.

the identification and performance comparison is expressed. Section V concludes the study.

II. Background

A. Transmission Network Branch Events

Typically the power system is designed to operate under (N-1) contingency level. Transmission network events can be caused by an physical disturbance, an equipment failure or a cyber-attack. The present power system is interconnected by high speed communication network. These channels are mostly dedicated secured connections. Yet, these communication infrastructure can be infiltrated. The 2015 Ukraine Blackout is such an example [6]. Thus, validation method of the existing system is beneficial for cyber-security as well.

B. Cellular Computational Network (CCN)

ANN is a mathematical model based on human nervous system. It consists of layers of nodes that are connected with each other. These connections are called neurons or weights. This component refers to the significance of the particular connection between two layers. There are two main models, feed-forward neural network and recurrent neural network [3]. Feed-forward neural network uses the inputs to infer the output based on the trained identifier. The recurrent neural network uses both inputs and the outputs from the previous time steps to infer the latest output based on the trained identifier. Neural networks are trained based on supervised, unsupervised or reinforcement learning. In this study, feed-forward multilayer perceptron neural network is used. The neural networks are trained by supervised learning method.

CCN framework decentralizes the complex problem and links the pieces of the system to establish a fully connected system to produce accurate results with less complexity. CCN implements a distributed artificial neural network system which can also be expressed as a sparsely connected cell network. Each cell includes a simplified neural network that solves the local problem, a communication unit is established to transmit data from sensor measurement concentrator to cells and event information from the cells to the visualization tool in this study.

III. Experiment

IEEE 12-bus, three area benchmark power system serves as the experimental system for this study, which is designed on RSCAD, a power system simulation software and simulated on the RTDS.

IEEE 12-bus benchmark system, includes three generators at bus two, three and six, and eleven branches (eight transmission lines and three transformers). Designed RSCAD simulation is integrated with software PMUs, Which measures voltage phasor and current phasor at both ends of each branch. The online measurements directly feeds to the computational platform for identification. The identification tool procedure is shown in Fig. 1. The system is simulated in RTDS and the measurements are transmitted to the computational platform (MATLAB). The first approach uses single multilayer perceptron (MLP) neural network. The second approach uses a cellular multilayer perceptron (CMLP) neural network.

A. Single Neural Network

Layer configuration for MLP is shown in Fig. 2. The MLP for this case contains 62 PMU measurement inputs, ten hidden neurons and the eleven branch status. Sums up to total of 730 weights. The system is trained with 3600 PMU measurement frames, collected from a series of random system branch events of the test case.

B. Cellular Computational Network (CCN)

In the first stage of CMLP, measurements are arranged in a data structure. The purpose of the data structure is to distribute the PMU data frame through the distributed algorithm efficiently. CMLP can be accommodated to any other test case by simply updating the data structure. While MLP is required neural network configuration update.

TABLE I
Size of Each cell with number of weight in the CMLP

Cell ID	No: Inputs	No: Hidden	No: Outputs	No: Weights
1	10	3	4	42
2	6	3	2	24
3	8	3	3	33
4	10	3	4	42
5	6	3	2	24
6	6	3	2	24
7	6	3	2	24
8	6	3	2	24
9	4	3	1	15
Total	62	27	22	252

The system contains 12 buses. Three buses are integrated into generation plant blocks. The rest of the nine buses are used as reference for CCN. CCN is setup analogue to the physical bus topology of the test case as shown in Fig. 1. Each cell ID is similar to the respective bus ID. The phasor measurements of each branch connected to a particular bus are inputs to the neural network of that particular cell. The 62 inputs of the single MLP neural network is distributed among the cells according to the defined data structure. Layer configuration for CMLP is shown in Fig. 3. The weights distribution of CMLP can be referred from the TABLE I.

Each branch status is identified by two cells in the CMLP approach. For an example, in Fig. 1, branch three status is identified by cell one and cell nine. This is shown in the Fig. 3 CMLP configuration as well. This is an advantage compared to MLP. Which only identified a branch status once. Output branch status from the two separate cells in CMLP is used for validation of the identification tool itself.

IV. Results & Discussion

The results of the two identification approaches for a defined set of events is shown in Fig. 4. Status = 1 indicates that transmission line or transformer is connected (closed breaker) and the status = 0 indicates that it is disconnected (opened breaker). Both approaches are capable of identifying the network branch events successfully. The event identification accuracy of both approaches for the tested cases were 100%.

Authorized licensed use limited to: CLEMSON UNIVERSITY. Downloaded on April 17,2026 at 19:27:53 UTC from IEEE Xplore. Restrictions apply.

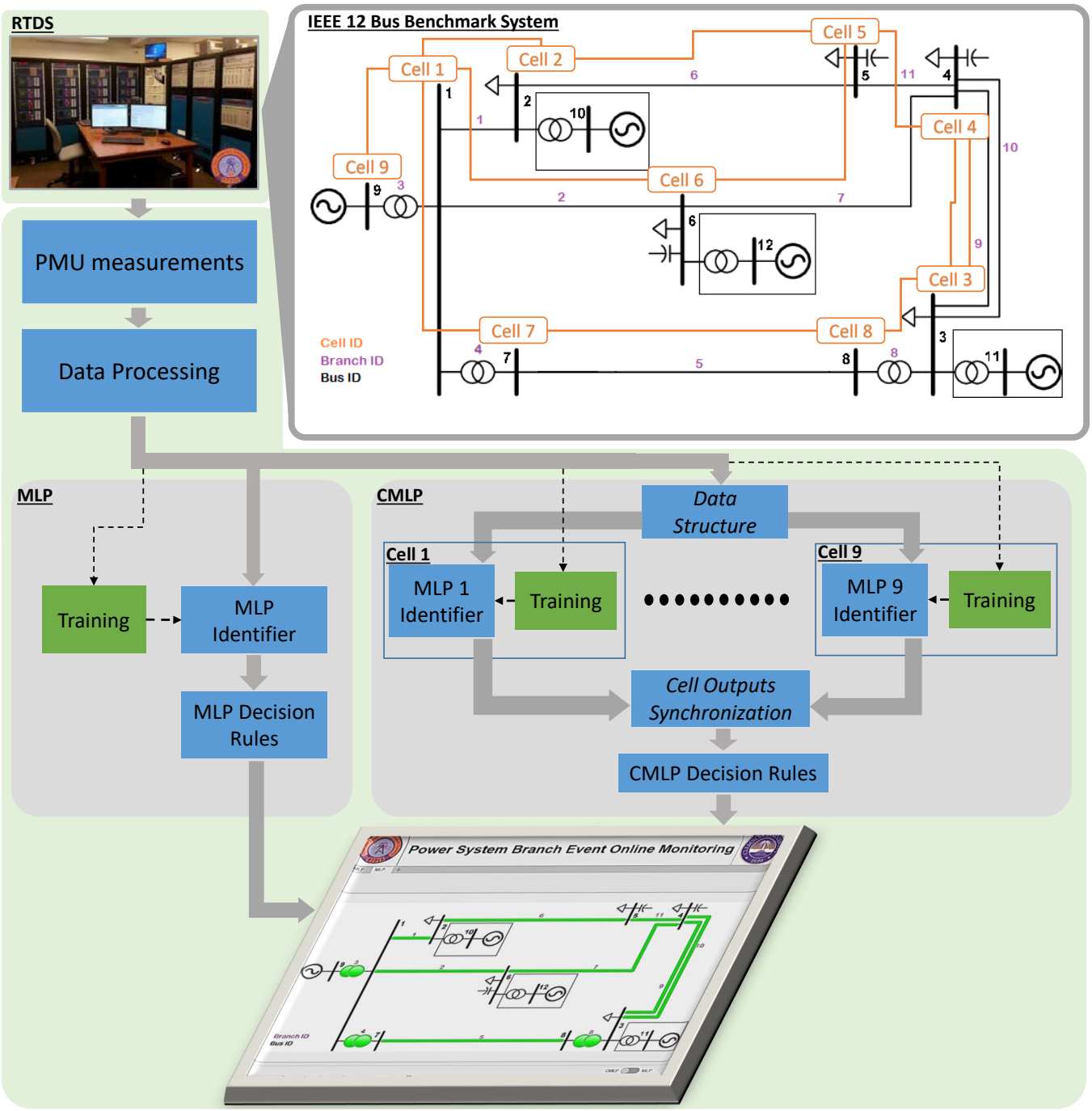

Fig. 1. Experiment procedure.

But it can be seen that the MLP identification is comparatively better compares to CMLP from Fid. 4. This is due to in MLP, data from neighbor buses includes in the training and identification, which enforce the event identification of each branch. i.e. There is a secondary layer of data assists for the identification in MLP approach. CMLP identification is only based on the data of the particular branch at the respective bus. Computational time for MLP is calculated by taking the average of 50 simulations to identify eleven events shown in Figure 4. Computational time statistics for CMLP is estimated by running 50 simulations to identify eleven events by all nine cells. The averaged maximum computational time is 5.905ms for cell 1 and minimum is 5.632ms for cell 9. The computational time of each cell in CMLP is less than the MLP. In a distributed implementation or centralized parallel processing this is an advantage. This is due to the less number of weight calculations are required in the CMLP. In CMLP totally 252 weights are calculated in each event identification compares to 730 weights in MLP for the same identification. Thus, computation burden of MLP is higher compares to CMLP. This is really important when it comes to large power networks. The most important factor is the process distribution.

Authorized licensed use limited to: CLEMSON UNIVERSITY. Downloaded on April 17,2026 at 19:27:53 UTC from IEEE Xplore. Restrictions apply.

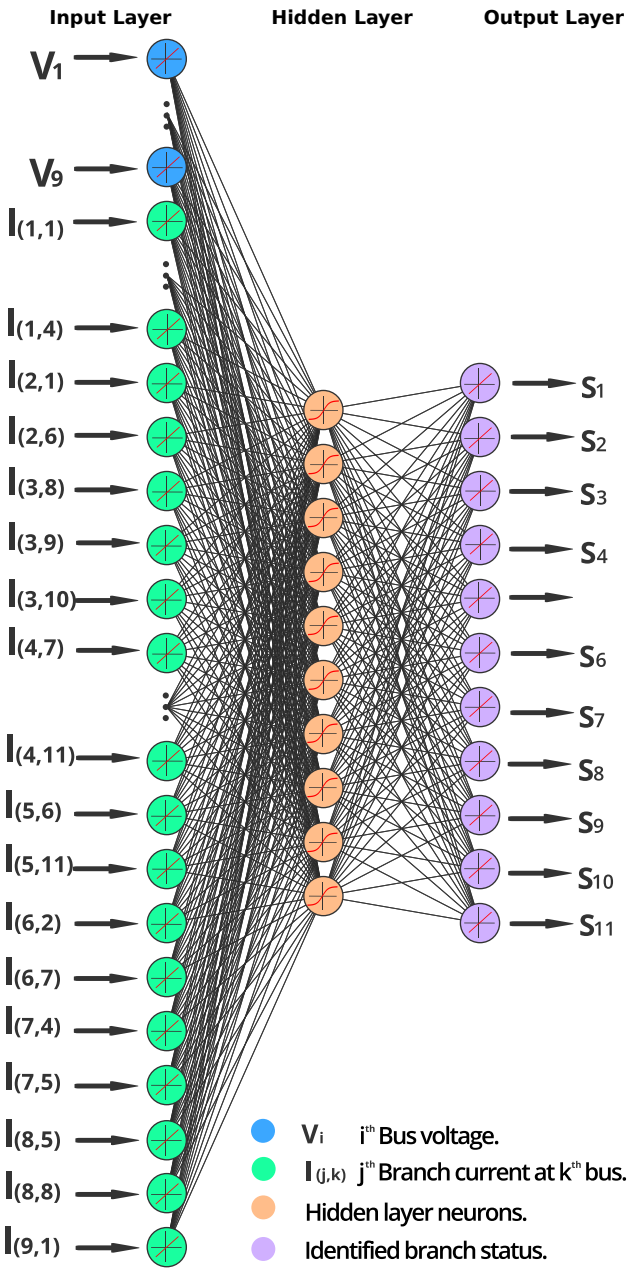

Fig. 2. Configuration of the single neural network for branch event identification.

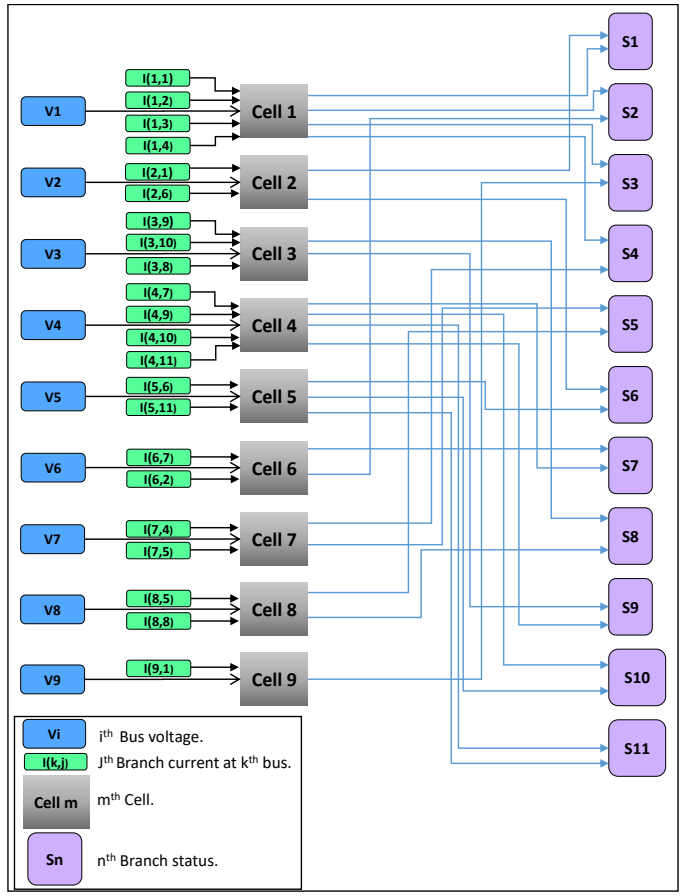

Fig. 3. Configuration of the CCN for branch event identification.

TABLE II
COMPARISON OF MLP AND CMLP

Factors		MLP	CMLP
Surety		High	High
Complexity		High	Medium
Computational time for single event identification (ms)	Process A[a]	6.12	-
	Process B[b]	-	5.772 ± 0.075
Distributed Processing		No	Yes
Parallel Circuit separate identification		Yes	Yes
Number of weights		730	252

[a] Single node is used to process.
[b] Nine separate nodes is used to process.

The power network is itself complex and the availability of data for different stakeholders is limited. When it comes to multi-utility operation, availability of the measurements of all nodes of the selected network might not possible. Thus, having a distributed architecture such as CMLP is useful and more practical in the actual operation.

V. CONCLUSION

PMU measurements based identification of power system network branch events was considered. Two neural network based event identification approaches are established and tested on IEEE 12-bus, three area benchmark power system. Two approaches are i) single multilayer perceptron neural network (MLP) and ii) cellular multilayer perceptron neural network (CMLP). The current and voltage phasor measurements of both ends of each branch is used as inputs for both approaches. MLP used the direct PMU measurement frame as input to the neural network and CMLP distributed PMU measurement frame according to the defined data structure among cells. The CMLP shows higher potential compares to MLP in an practical integration. The distributed processing and multiple event status identification for a single branch from different cells are notable advantages of the CMLP.

Future research should involves extension of the study for a large power system. More efficient intelligent approaches can be investigated. Furthermore the approach should be modified to identify the branch events with less number of measurement

Authorized licensed use limited to: CLEMSON UNIVERSITY. Downloaded on April 17,2026 at 19:27:53 UTC from IEEE Xplore. Restrictions apply.

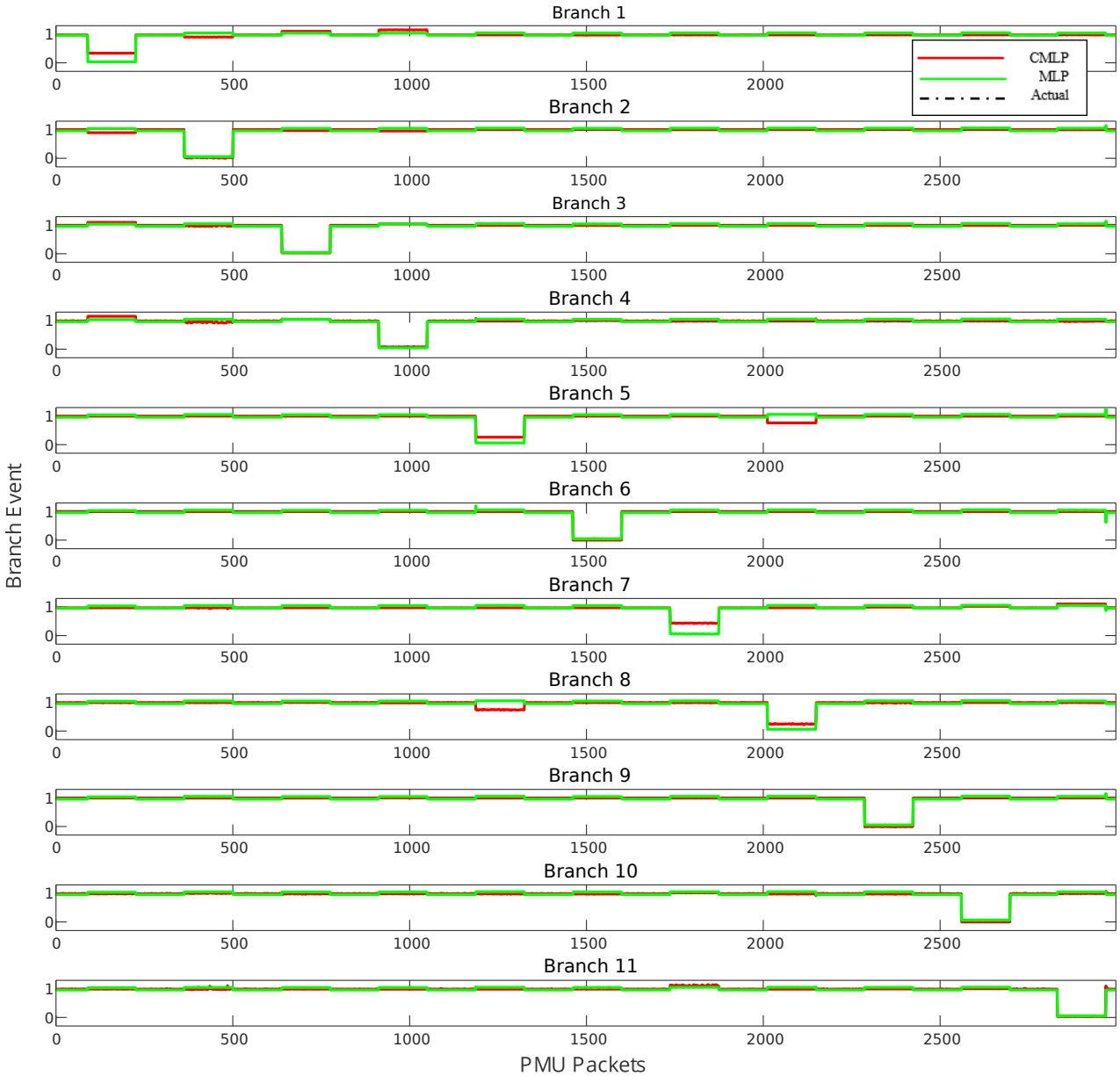

Fig. 4. Branch Events.

data considering the fact that every node in the network is not equipped with PMUs. This study only investigates the (N-1) contingency level. Thus, higher level of contingency scenarios should be considered.

References

[1] J. De La Ree, V. Centeno, J. S. Thorp, and A. G. Phadke, "Synchronized phasor measurement applications in power systems," *IEEE Transactions on Smart Grid*, vol. 1, no. 1, pp. 20–27, June 2010.

[2] Dulip Madurasinghe, Paranietharan Arunagirinathan, and Ganesh K. Venayagamoorthy, "Online identification of power system network branch events," presented at the ISGT Europe 2019, Bucharest, Romania, unpublished.

[3] L. H. Hassan, M. Moghavvemi, H. A. Almurib, and O. Steinmayer, "Current state of neural networks applications in power system monitoring and control," *International Journal of Electrical Power Energy Systems*, vol. 51, pp. 134 – 144, 2013. [Online]. Available: http://www.sciencedirect.com/science/article/pii/S014206151300104X

[4] B. Luitel and G. K. Venayagamoorthy, "Cellular computational networks - a scalable architecture for learning the dynamics of large networked systems," *Neural Networks*, vol. 50, pp. 120 – 123, 2014. [Online]. Available: http://www.sciencedirect.com/science/article/pii/S0893608013002529

[5] Shan Jiang, U. D. Annakkage, and A. M. Gole, "A platform for validation of facts models," *IEEE Transactions on Power Delivery*, vol. 21, no. 1, pp. 484–491, Jan 2006.

[6] G. Liang, S. R. Weller, J. Zhao, F. Luo, and Z. Y. Dong, "The 2015 ukraine blackout: Implications for false data injection attacks," *IEEE Transactions on Power Systems*, vol. 32, no. 4, pp. 3317–3318, July 2017.

Authorized licensed use limited to: CLEMSON UNIVERSITY. Downloaded on April 17,2026 at 19:27:53 UTC from IEEE Xplore. Restrictions apply.