LVQ Neural Network for Online Identification of Power System Network Branch Events

Dulip Madurasinghe[1], *Student Member*, *IEEE*, Ganesh K. Venayagamoorthy[1,2], *Senior Member*, *IEEE*
[1]Real-Time Power and Intelligent Systems Laboratory,
Holcombe Department of Electrical and Computer Engineering, Clemson University, Clemson, SC 29634, USA
[2]Eskom Centre of Excellence in HVDC Engineering, University of KwaZulu-Natal, Durban, South Africa
dtmadurasinghe@ieee.org and gkumar@ieee.org

***Abstract*— The transmission network is the backbone of the power system. Fast power system network branch event identification is required to maintain security of the power system. Phasor measurement units (PMUs) provide synchronized voltage and current phasor measurements to a centralized phasor data concentrator (PDC). Thus, PMU measurements can be used for online branch event identification. A fast and efficient approach is required to ease the computational load. Learning vector quantization (LVQ) neural network algorithm is presented in this paper as a solution to identify branch events. The power system is highly distributed. Thus, a cellular computational network (CCN) is utilized to distribute a single large LVQ's computational load. The IEEE 12-bus benchmark power system is used to illustrate the CCN-LVQ approach. The power system is simulated on a real-time digital simulator. CCN-LVQ approach is shown to be fast, efficient and comparatively accurate for transmission network branch event identification.**

***Index Terms*—LVQ, PMU, CCN, transmission line outage, transformer outage**

I. Introduction

The traditional power system is modernized by accommodating technologies, such as utility scale renewable generations, distributed energy sources, energy storages, electrified transportation, demand response and demand side management. Introduction of Phasor Measurement Units (PMU) helps in this cause [1]. PMU measures voltage, current phasors and frequency at a rate of 30Hz (in most commissioned PMUs). These measurements are synchronized in terms of time by using Global Positioning System (GPS). These time-tagged measurements transmitted through wired (Fiber optic) or wireless (Cellular, Satellite or Microwave) communication to the Phasor Data Concentrator (PDC) [2]. The fully connected communication backbone ensures the efficient measurement delivery to the computational platform.

Successful operation of the geographically distributed transmission network and its components are critical for the reliable power system operation. The transmission network acts as the bridge between bulk generation and distribution system. Transmission network branch outage can occur due to a number of reasons, which may lead to partial or complete blackout. Thus, accurate identification of these events is critical.

IEEE 12-bus, a three area benchmark power system, serves as the experimental case study. The system is designed on RSCAD, a power system simulation software. The system is simulated on the real-time digital simulator (RTDS). The IEEE 12-bus system, with three generators at bus two, three and six, has eleven branches (eight transmission lines and three transformers) in the network. The system is integrated with PMUs, measuring voltage and current phasors of both ends of each branch. The online measurements from the PMU directly send to the computational platform for identification.

Intelligent computation is considered superior to the traditional mathematical approaches in solving complex non-linear problems. Neural network is one of the main sub-categories under computational intelligence. In this study, learning vector quantization (LVQ) neural network based event identification approach using PMU measurements is investigated. Furthermore, distributed LVQ architecture is experimented and performance comparison with single LVQ is conducted. The comparison taken forward with multilayer perceptron neural network (MLP) approach is used in [3] & [4]. A redundant monitoring tool can be established by integrating an intelligent tool like this with current relay based outage identification system. This will increase the surety of the branch event identification.

In this paper, the background of the study is explained in section II. In section III, experiment of branch event identification with single neural network and cellular multilayer perceptron network architectures is expressed. In section IV, results of the identification and performance comparison are expressed. Section V concludes the study.

II. Background

A. Learning Vector Quantization (LVQ) Neural Network

LVQ is a neural network that is based on a hybrid of unsupervised and supervised learning methods. The primary objective of LVQ training is to prepare a set of classes based on the observed data samples. The LVQ training procedure is shown in Fig. 2.

This study is supported by the National Science Foundation (NSF) of the United States, under grants IIP #1312260, #1408141 and #1738902, and the Duke Energy Distinguished Professorship Endowment Fund. Any opinions, findings and conclusions or recommendations expressed in this material are those of author(s) and do not necessarily reflect the views of National Science Foundation and Duke Energy.

Authorized licensed use limited to: CLEMSON UNIVERSITY. Downloaded on April 17,2026 at 19:28:13 UTC from IEEE Xplore. Restrictions apply.

978-1-7281-9384-7/20/$31.00 ©2020 IEEE

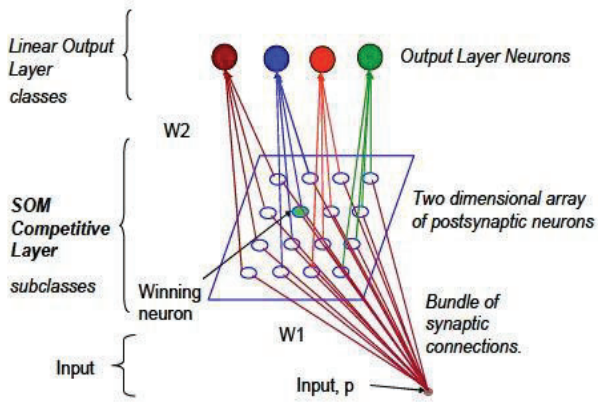

Fig. 1. LVQ neural network [5].

At the beginning of the training, a set of weight vectors are created with random values. Initial training rate (α) is set. Each training vector is used to adjust the weight vectors such that it can classify any input vector into the correct output. In the first step the Euclidean distance is calculated for each input vector with weights using (1).

$$D_i^l = \left\| {}_iW^1 - P_i \right\| \qquad (1)$$

The Euclidean distance vectors are then used to find the closest weight vector to the input using (2). Thus, the closest weight vector will output "1" and the other neurons will be "0" output.

$$a^1 = compet(D_i^l) \qquad (2)$$

The winning neurons represent a subclass. One or more subclasses makes up a class. Subclasses are combined into classes by using (3).W^2 is the subclasses to classes matching structure. Each row in W^2 is representing a class, and each column represent a subclasses. "1" in each location represent that subclass (column) is under the specific class (row).

$$a^2 = W^2 a^1 \qquad (3)$$

Actual output is compared with the classification output. Kohonen rule is used to improve the hidden layer. If classification is correct, the weight is adjusted such that it is close to the input using (4). If classification is incorrect, the weight is adjusted such that it is away from the input using (5).

$${}_{i+1}W^1 = {}_iW^1 + \alpha_j(P_{i+1} - {}_iW^1) \qquad (4)$$

$${}_{i+1}W^1 = {}_iW^1 - \alpha_j(P_{i+1} - {}_iW^1) \qquad (5)$$

This overall process is repeated until the training output is satisfied. Each repetition is conducted by updating the learning rate. This rate update can be customized as user required. In this study learning rate is updated using (6).

$$\alpha_{j+1} = \alpha_j/2 \qquad (6)$$

In this study LVQ based identification is tested for both single neural network and distributed architectures.

B. Cellular Computational Network (CCN)

Cellular Computational Network (CCN) framework is introduced in [6]. CCN decentralizes the problem formulation and links the pieces of the system to make a fully coherent system to produce more accurate results with a reduced complexity. CCN implementation is a distributed deep learning system. It can also be seen as a sparsely connected network of cells. Each cell comprises of a computational unit that solves the simplified local system. LVQ based CCN (CLVQ) is designed and used for the identification. CLVQ is shown in Fig. 1. The study evaluates the performance of the single and the distributed architectures.

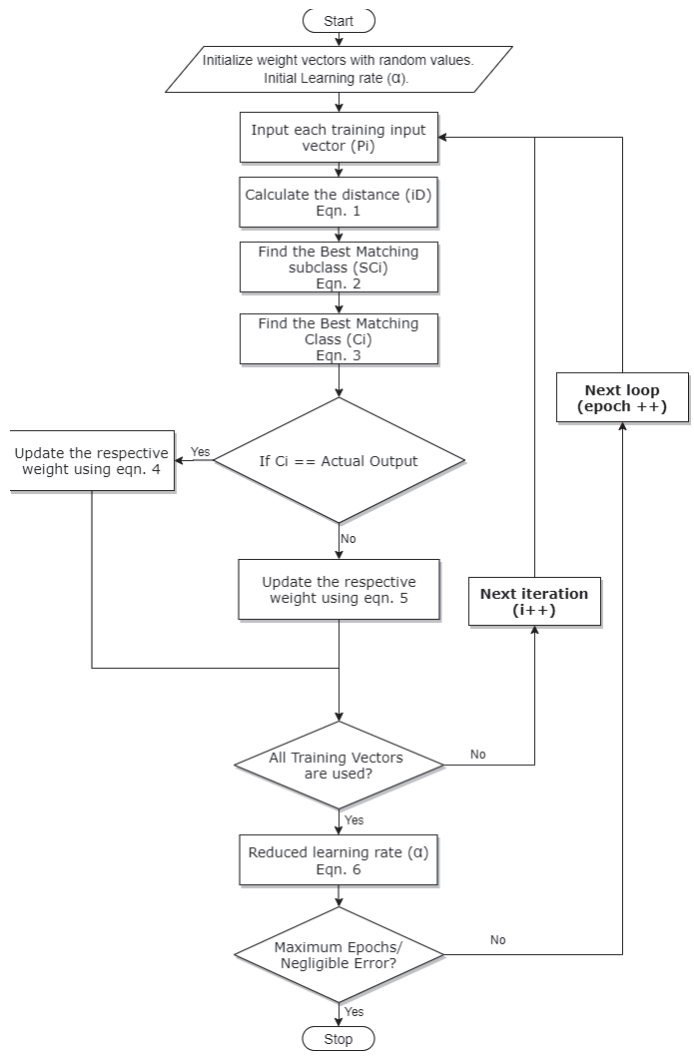

Fig. 2. LVQ training procedure.

III. Experiment

IEEE 12-bus benchmark system, includes three generators at bus two, three and six, and eleven branches (eight transmission lines and three transformers). Designed RSCAD simulation is integrated with software PMUs, which measures the voltage phasor and current phasor at both ends of each branch. The online measurements directly feed to the computational

Authorized licensed use limited to: CLEMSON UNIVERSITY. Downloaded on April 17,2026 at 19:28:13 UTC from IEEE Xplore. Restrictions apply.

platform for identification. The identification tool procedure is shown in Fig. 2. The system is simulated in RTDS and the measurements are transmitted to the computational platform (MATLAB). The first approach uses single LVQ neural network. The second approach uses a cellular LVQ neural network.

A. Single LVQ Neural Network (LVQ)

The single LVQ in this case contains 62 PMU measurement inputs, 24 subclasses and twelve classes. The twelve classes comprise of eleven branch events and the nominal case. The system is trained with 7000 PMU measurement frames, collected from a series of random system branch events of the test case.

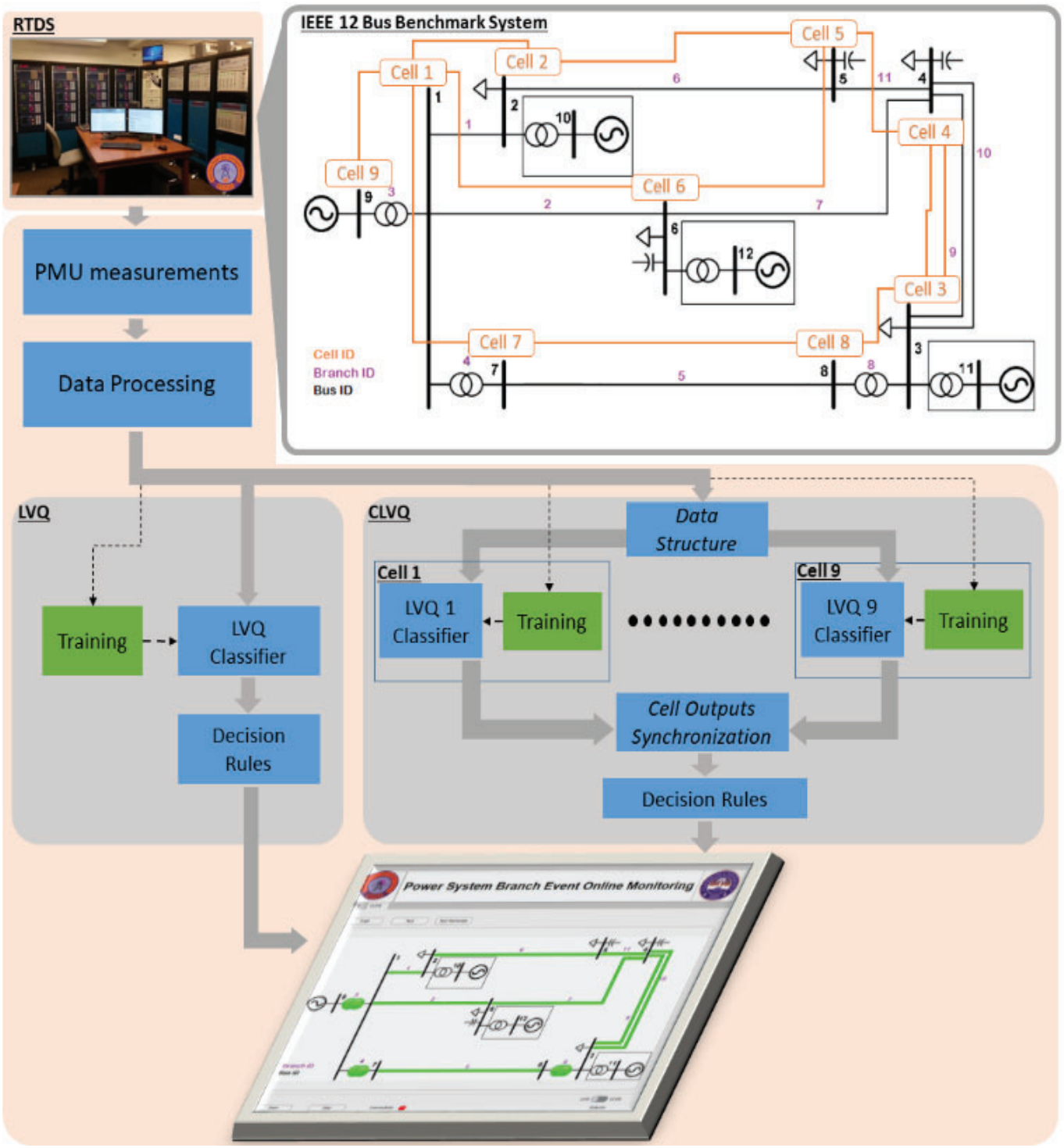

Fig. 3. Online Identification tool procedure.

B. CCN based LVQ Neural Network (CLVQ)

In the first stage of CLVQ, measurements are arranged in a data structure. The purpose of the data structure is to distribute

Authorized licensed use limited to: CLEMSON UNIVERSITY. Downloaded on April 17,2026 at 19:28:13 UTC from IEEE Xplore. Restrictions apply.

the PMU data frame through the distributed algorithm efficiently. CLVQ can be accommodated to any other test case by simply updating the data structure. LVQ neural network is required a minor configuration update as well.

The system contains 12 buses. Three buses are integrated into generation plant blocks. The rest of the nine buses are used as reference for CCN. CCN is setup analogue to the physical bus topology of the test case as shown in Fig. 3. Each bus cell ID is similar to the respective bus ID. The phasor measurements of each branch connected to a particular bus are inputs to the neural network of that particular bus cell. The 62 inputs of the single MLP neural network are distributed among the bus cells according to the defined data structure. Layer configuration for CLVQ is shown in Fig. 4.

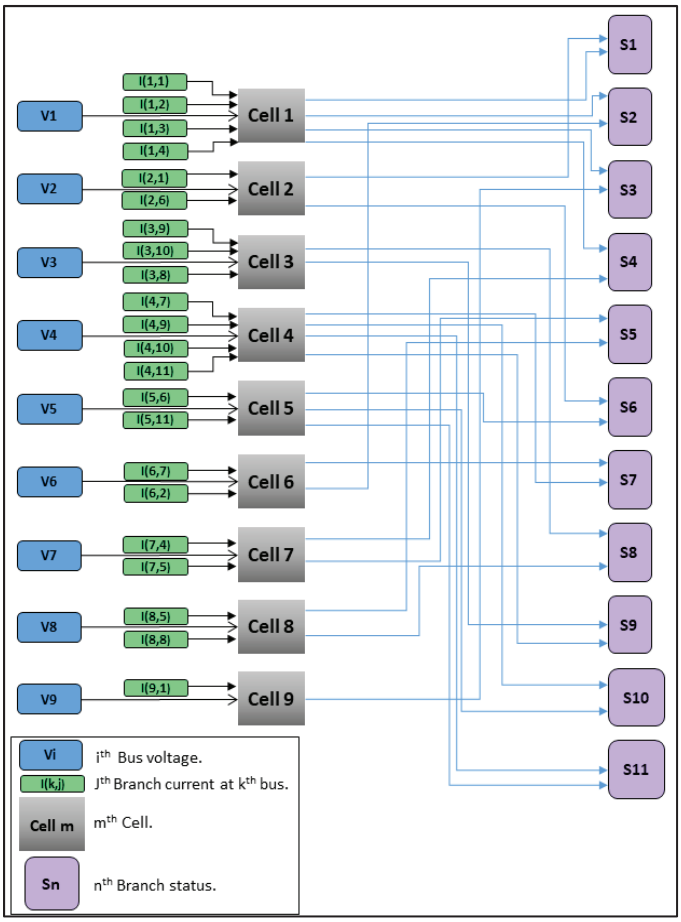

Fig. 4. Cellular neural network structure.

IV. Results & Discussion

Four different approaches were considered. The results for the all approaches compared to the actual branch events are shown in Figs 5 and 6. For the comparison purpose, the results from the [3] & [4] are used.

1. MLP – A single MLP neural network for the identification.
2. LVQ - A single LVQ neural network for the identification.
3. CMLP - Cellular MLP neural network with the structure shown in Fig. 4 for the identification.
4. CLVQ - Cellular LVQ neural network with the structure shown in Fig. 4 for the identification.

Status = 1 in the results shows that the line connected (breaker is closed), and the status = 0 shows that the line is disconnected (breaker is open). The results show the event identification for each PMU frame sent to the PDC.

Single neural network structure based MLP and LVQ results are shown in Fig. 5. The comparison is shown in TABLE I. MLP shows higher accuracy with higher operational time for the identification compared to other the three approaches. LVQ approach is efficient in computation compared to both MLP and CMLP, though the accuracy is very low. As it is shown in Fig. 5, only branches 3, 4, 5 and 8 events are correctly classified.

The CCN based CLVQ and CMLP results are shown in Fig. 6. CMLP is accurate compared to LVQ and CLVQ. Operational time is less compared to single MLP approach, though it is higher compared to both LVQ and CLVQ. CLVQ shows comparatively medium accuracy and highest operational performance out of the four approaches. Although, each branch event is classified twice by two bus cells. For example, branch 1 event identification is conducted by both bus cell 1 and bus cell 2. CLVQ is capable of identifying each branch event accurately, in case of selected prioritized bus cell that is higher in accuracy for particular branch. This step is called superior bus cell selection. For example, branch 4 events are identified by both bus cell 1 and bus cell 7, but bus cell 1 identification is accurate compared to bus cell 7. Thus, bus cell 1 is the selected prioritized cell.

TABLE I. Comparisson of MLP,LVQ,CMLP and CLVQ approaches

Factors	MLP	LVQ	CMLP	CLVQ
Surety	100%	36.37%	100%	77.27%
Complexity	Medium	Medium	Low	Low
Operational time[a] (ms)	6.12	0.106	5.772±0.075	0.0565±0.0055
Scalability	Low	Low	High	High
Distributed Processing	No	No	Yes	Yes

a. On the same computational platform

V. Conclusion

LVQ based power system network event branch classification tool is established. Event classification tool is used to identify events on IEEE 12-bus benchmark system simulated on RTDS. The results of the study are compared with the MLP based identification approach. The CLVQ is computationally efficient and accurate to identify all branch events. Power system network branch events are critical. Fast and accurate identification of such events is essential. Most importantly, power system is rapidly evolving. Centralized system monitoring and control is not practical. Scalable approaches are more favourable. Thus, CLVQ is preferred for branch event classification compared to other approaches in the

Authorized licensed use limited to: CLEMSON UNIVERSITY. Downloaded on April 17,2026 at 19:28:13 UTC from IEEE Xplore. Restrictions apply.

study. PMU device commissioning is an expensive task. Thus, only critical nodes are equipped with PMUs. In this situation, further studies are required to develop accurate, efficient event identification with less number of PMUs. The LVQ algorithm can be improvise using voltage and current phases derivatives as inputs to the network in both LVQ and CLVQ approaches.

REFERENCES

[1] J. De La Ree, V. Centeno, J. S. Thorp, and A. G. Phadke, "Synchronized phasor measurement applications in power systems," *IEEE Transactions on Smart Grid* , vol. 1, no. 1, pp. 20–27, June 2010.

[2] B. Appasani and D. K. Mohanta, "A review on synchrophasor communication system: communication technologies, standards and applications," *Protection and Control of Modern Power Systems* , vol. 3, no. 1, p. 37, Dec 2018. [Online]. Available: https://doi.org/10.1186/ s41601- 18-0110-4.

[3] D. Madurasinghe, P. Arunagirinathan and G. K. Venayagamoorthy, "Online Identification of Power System Network Branch Events," 2019 *IEEE PES Innovative Smart Grid Technologies Europe (ISGT-Europe)*, Bucharest, Romania, 2019, pp. 1-5.

[4] D. Madurasinghe, P. Arunagirinathan and G. K. Venayagamoorthy, "Distributed Identification of Power System Network Branch Events," Under review.

[5] G. K. Venayagamoorthy and M. Zarghami, "Wide area power system protection using a learning vector quantization network," in *Proceedings of the 13th International Conference on, Intelligent Systems Application to Power Systems*, Nov 2005, pp. 5 pp.–.

[6] B. Luitel and G. K. Venayagamoorthy, "Cellular computational networks – a scalable architecture for learning the dynamics of large networked systems," *Neural Networks*, vol. 50, pp. 120 – 123, 2014. [Online].

Authorized licensed use limited to: CLEMSON UNIVERSITY. Downloaded on April 17,2026 at 19:28:13 UTC from IEEE Xplore. Restrictions apply.

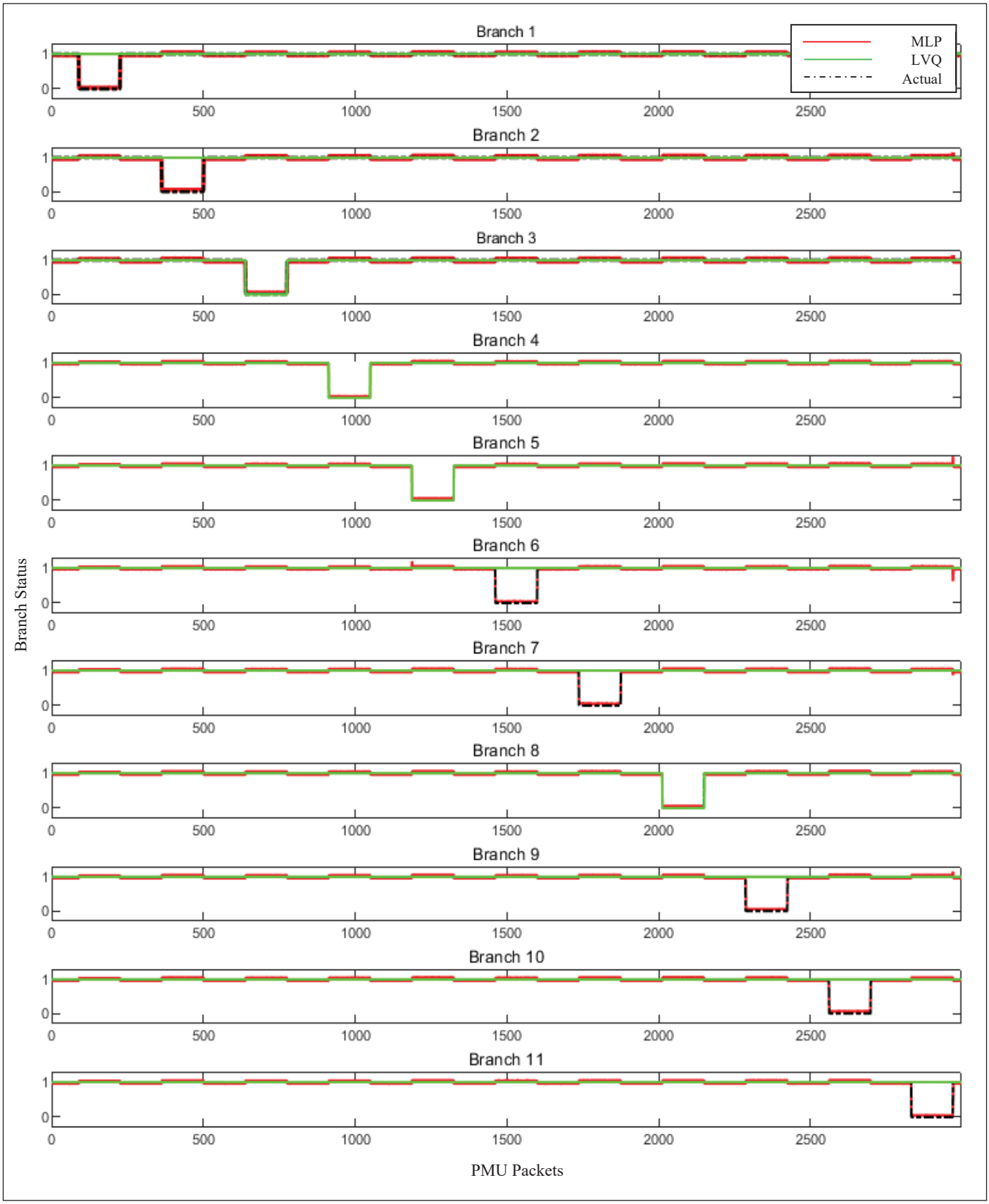

Fig. 5. Single MLP & LVQ compared to actual branch event identification.

Authorized licensed use limited to: CLEMSON UNIVERSITY. Downloaded on April 17,2026 at 19:28:13 UTC from IEEE Xplore. Restrictions apply.

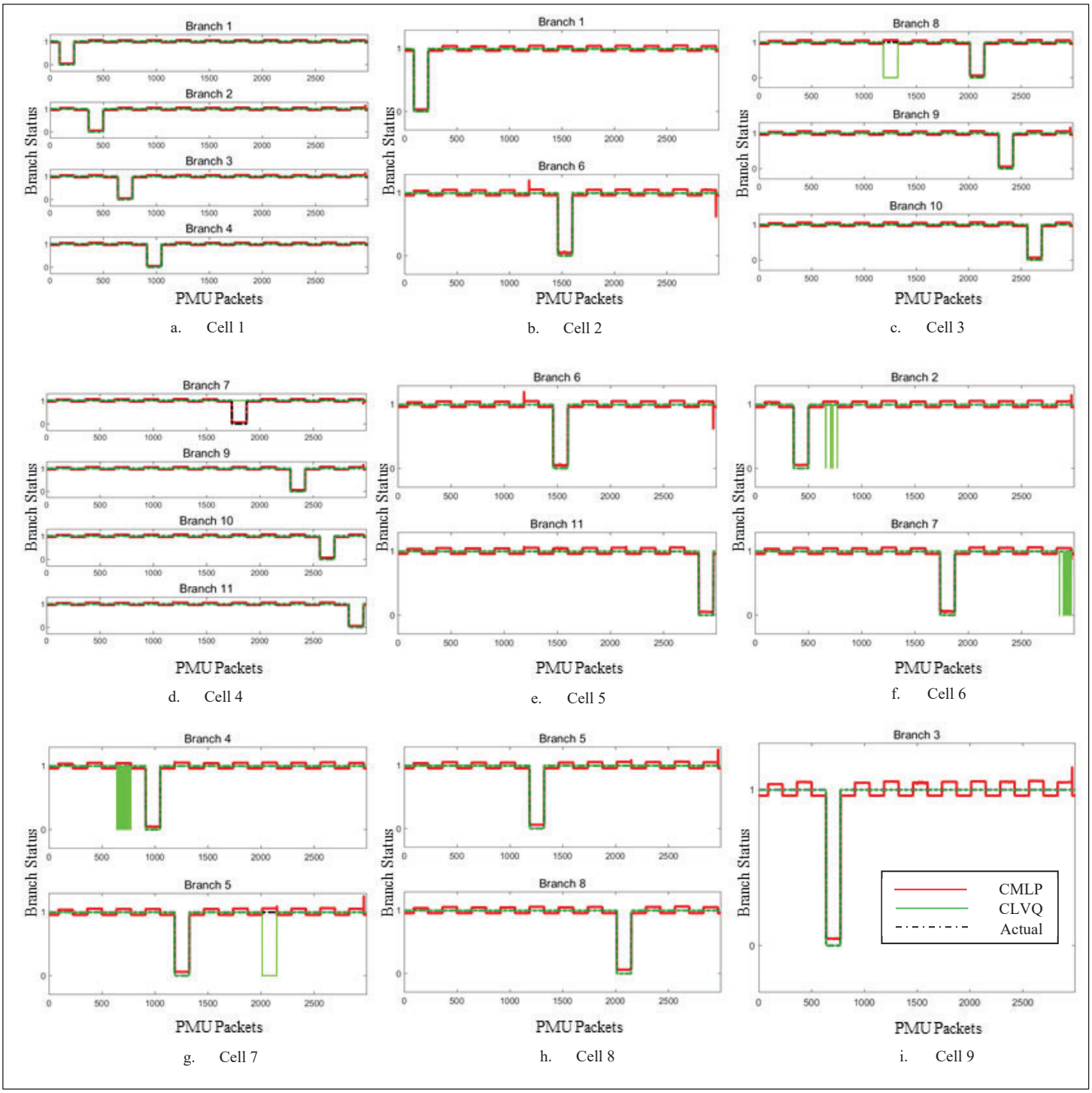

Fig. 6. Cellular MLP & Cellular LVQ compared to actual branch event identification.

Authorized licensed use limited to: CLEMSON UNIVERSITY. Downloaded on April 17,2026 at 19:28:13 UTC from IEEE Xplore. Restrictions apply.