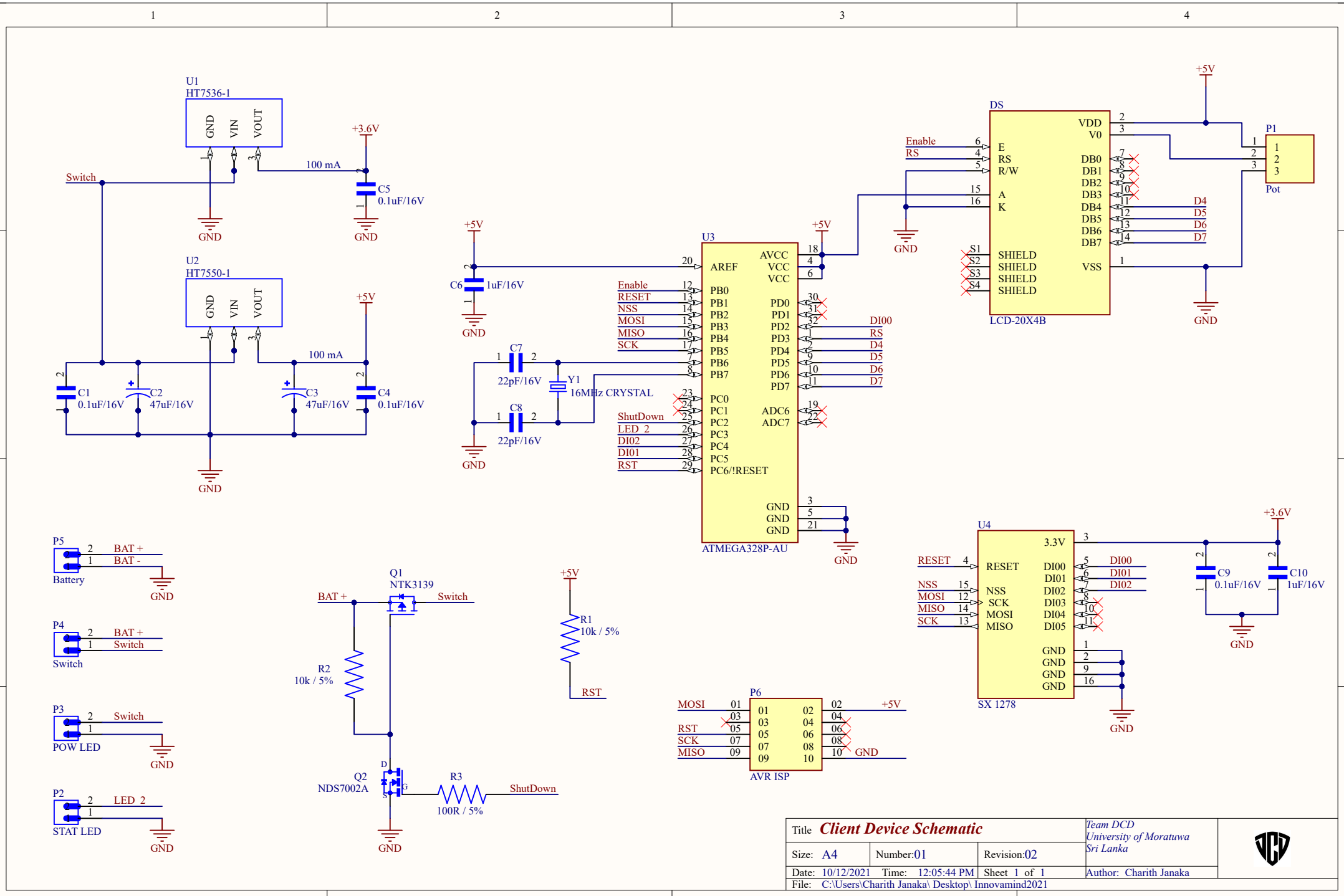

Title	*Client Device Schematic*		*Team DCD* *University of Moratuwa* *Sri Lanka*
Size: A4	Number:01	Revision:02	
Date: 10/12/2021 Time: 12:05:44 PM	Sheet 1 of 1		Author: Charith Janaka
File: C:\Users\Charith Janaka\ Desktop\ Innovamind2021			