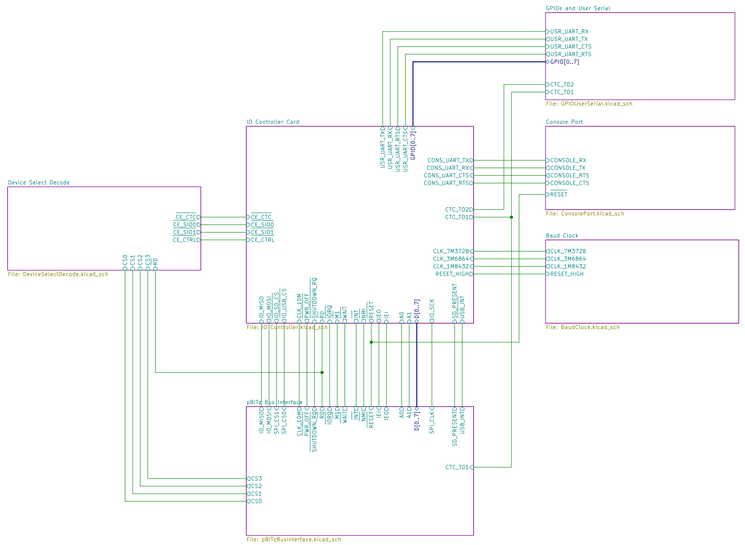

Sheet: /
File: Zephyr-80-IO.kicad_sch

Title: Zephyr-80 IO Controller

Size: D Date: 2026-02-02	Rev: 0.1
KiCad E.D.A. 10.0.5	Id: 1/1

Signal	Function
POWER_OFF_RQ	Sent to power supply manager to request shutdown
POWER_OFF	Sent to power supply manager to turn off
RESET	Outgoing general reset
RESET_SW	Tied to physical RESET Switch
NMI_RQ	Tied to physical NMI button
NMI	Tied to NMI signal of CPU
SD_PRESENT	Tied to CARD PRESENT of SD Card and DCD of SIO1
USB_PRESENT	Tied to USB Port UP and DCD of SIO0
SB_BUSY	Optional LED, Signal SD Card activity
USB_RST	Output to RESET USB Controller
USB_INT	Interrupt Input from USB Controller
USB_CS/SD_CS	SPI Chip Selects

SIO Device	SIO Channel	Function	Baud Rate	Address (Data/Ctrl)
SIO0	A	User Port	CTC Controlled	21/23
SIO0	B	Console	115200	20/22
SIO1	A	Bulk Data	SPI	31/33
SIO1	B	Commands	SPI	30/32
CTRL	N/A	Controllers	SPI	E0-FF

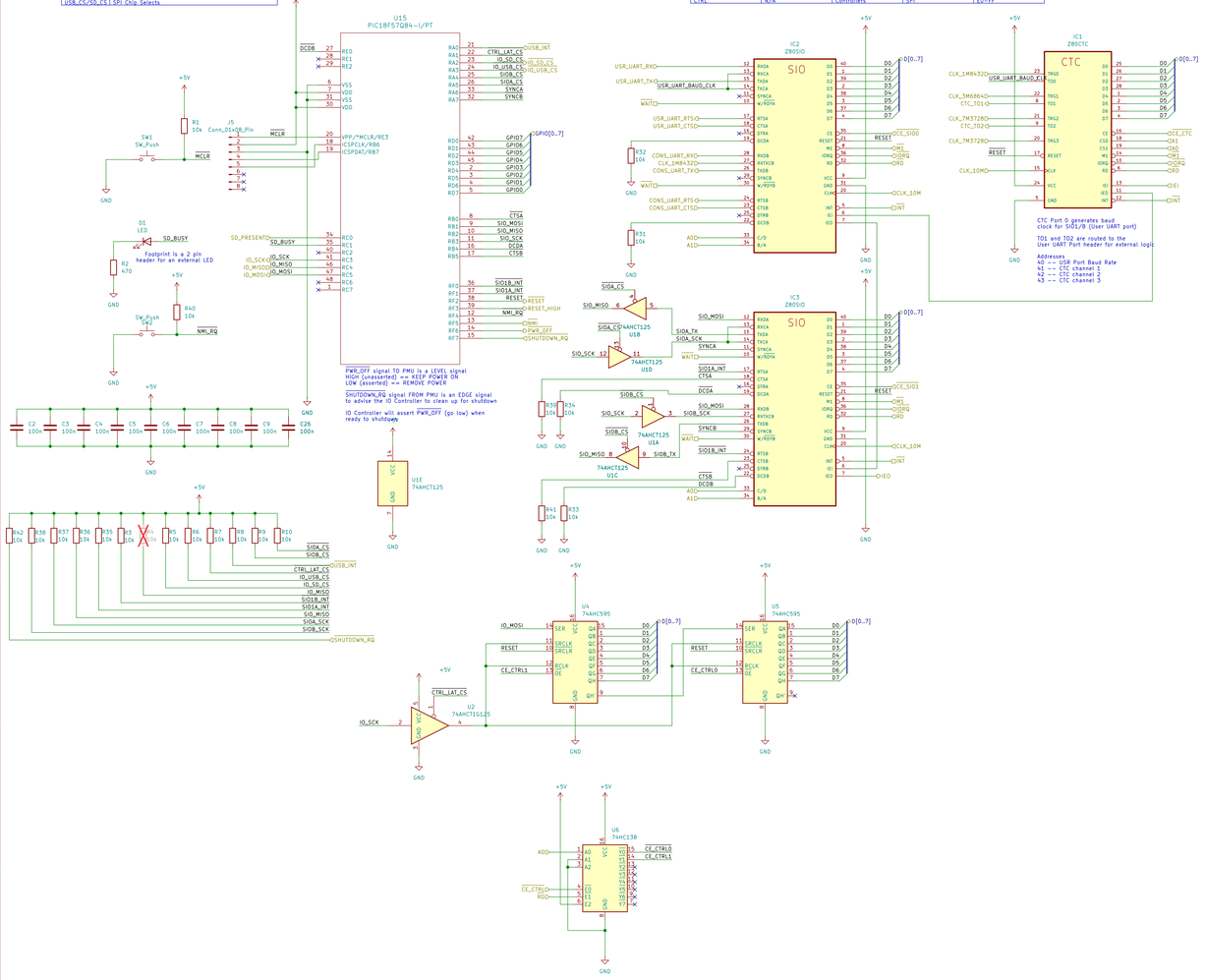

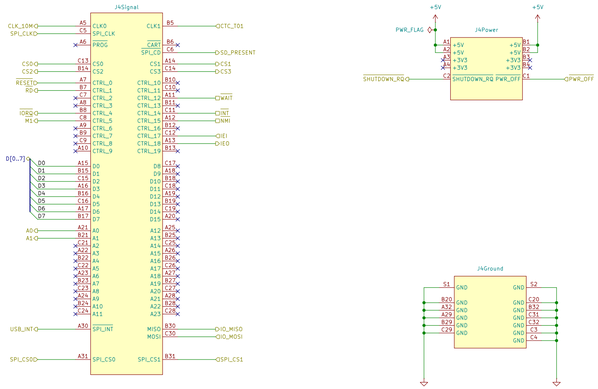

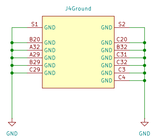

Sheet: /pBITz Bus Interface/
File: pBITzBusInterface.kicad_sch

Title:

Size: D	Date:	**Rev:**
KiCad E.D.A. 10.0.5		Id: 3/7

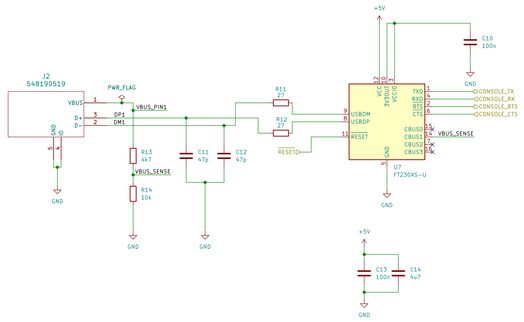

Sheet: /Console Port/
File: ConsolePort.kicad_sch

Title:

Size: D	Date:	Rev:
KiCad E.D.A. 10.0.5		Id: 4/7

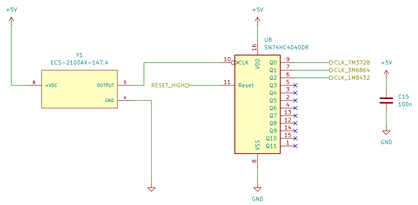

Sheet: /Baud Clock/
File: BaudClock.kicad_sch

Title: Baud Rate Generator

Size: D	Date: 2026-02-02	Rev: 0.1
KiCad E.D.A. 10.0.5		Id: 5/1

Device Selection Logic (device side):
CPU decodes the address and puts
the corresponding chip select on
the bus (CS0-CS3). The /CS line activated
matches the address selected on the rotary encoder

This IO Card has 3 devices that can be selected by the
CPU, therefore 3 comparators and rotary encoders

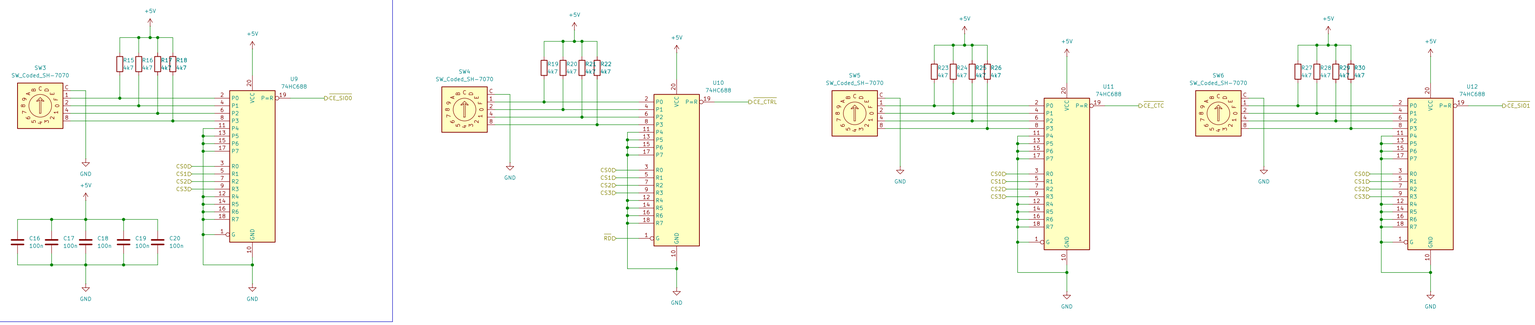

Sheet: /Device Select Decode/
File: DeviceSelectDecode.kicad_sch

Title:

Size: D	Date:	Rev:
KiCad E.D.A. 10.0.5		Id: 6/7

User Port output using a DA-26 connector
Use with a breakout board like
https://a.co/d/9hZICqW

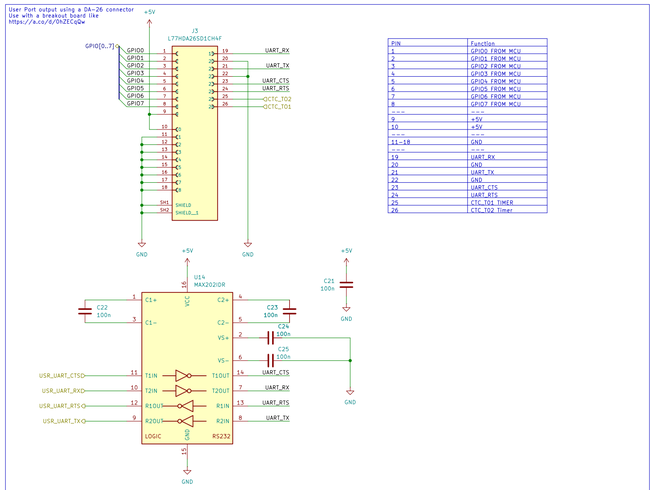

PIN	Function
1	GPIO0 FROM MCU
2	GPIO1 FROM MCU
3	GPIO2 FROM MCU
4	GPIO3 FROM MCU
5	GPIO4 FROM MCU
6	GPIO5 FROM MCU
7	GPIO6 FROM MCU
8	GPIO7 FROM MCU
----	----
9	+5V
10	+5V
----	----
11-18	GND
----	----
19	UART_RX
20	GND
21	UART_TX
22	GND
23	UART_CTS
24	UART_RTS
25	CTC_TO1 TIMER
26	CTC_TO2 Timer

Sheet: /GPIOs and User Serial/
File: GPIOUserSerial.kicad_sch

Title:

Size: D	Date:	Rev:
KiCad E.D.A. 10.0.5		id: 7/7