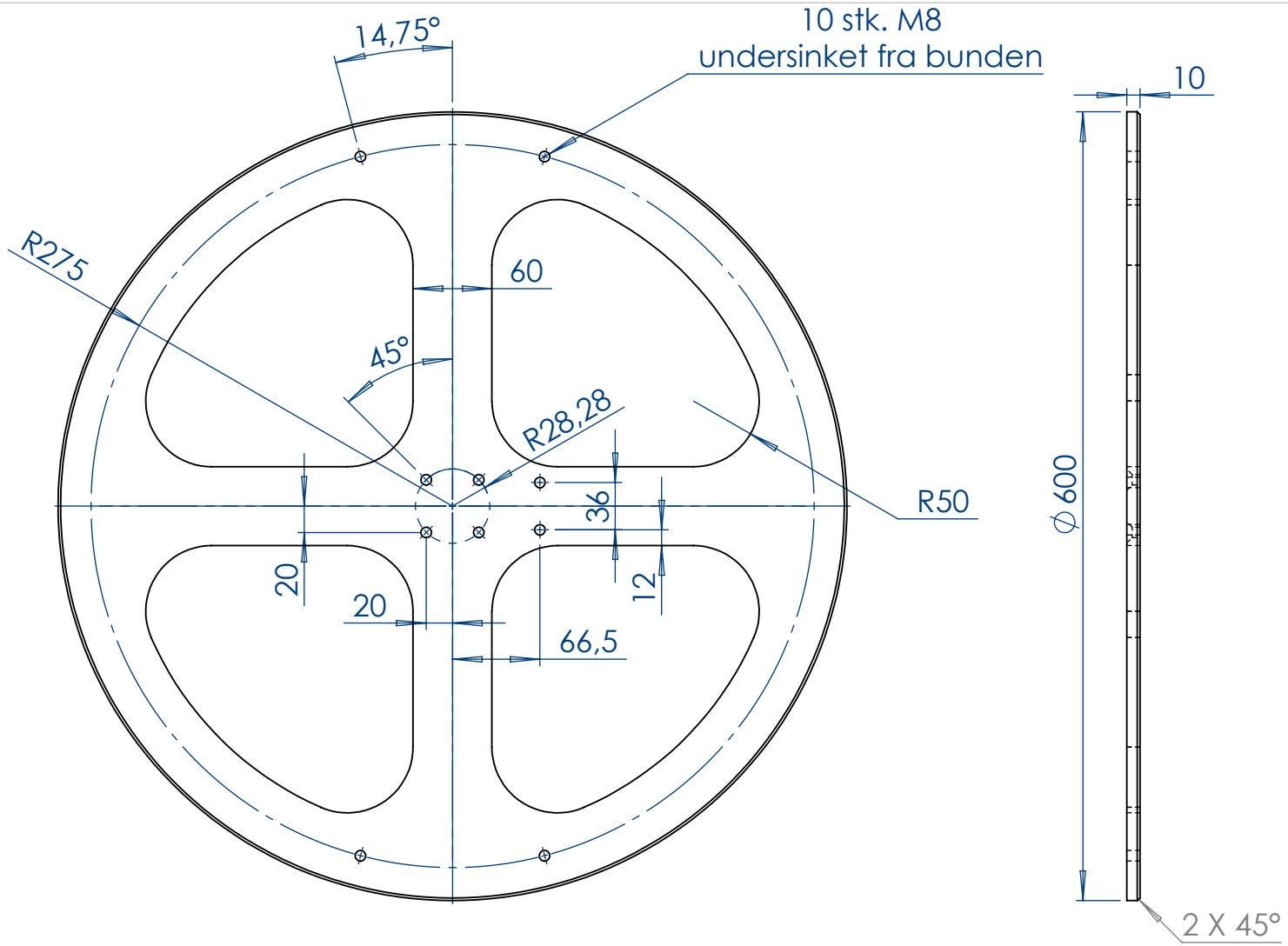

PROPRIETARY AND CONFIDENTIAL

THE INFORMATION CONTAINED IN THIS DRAWING IS THE SOLE PROPERTY OF UNIVERSAL ROBOTS Aps. ANY REPRODUCTION IN PART OR AS A WHOLE WITHOUT THE WRITTEN PERMISSION OF UNIVERSAL ROBOTS Aps. IS PROHIBITED.

Revision History:

R07 til R08: Hul i center ændret pga. ny encoder calibrations værktøj.
R08 til R09: Center hul modifikation.

NEXT ASSY:

Location:

	NAME	DATE
DRAWN	LH	12-10-2011
ENG APPR.		
MFG APPR.		
MATERIAL:	WEIGHT:	

UNLESS OTHERWISE SPECIFIED:

Dimensions are in millimeters
Surface finish: Rz 63µm
Linear tolerance: ±0,1mm
Angular tolerance: ±0,5°
Debur and break sharp edges.

UNIVERSAL ROBOTS

Tel: +45 89 93 89 89
Fax: +45 38 79 89 89
Engineer direct:
Tel: +45 89 93 89 72
larry@universal-robots.com

TITLE:

Demo Platform

SIZE	DWG. NO.	REV
A4	00.000.00	r00

SCALE: 1:5 | SHEET 1 OF 2
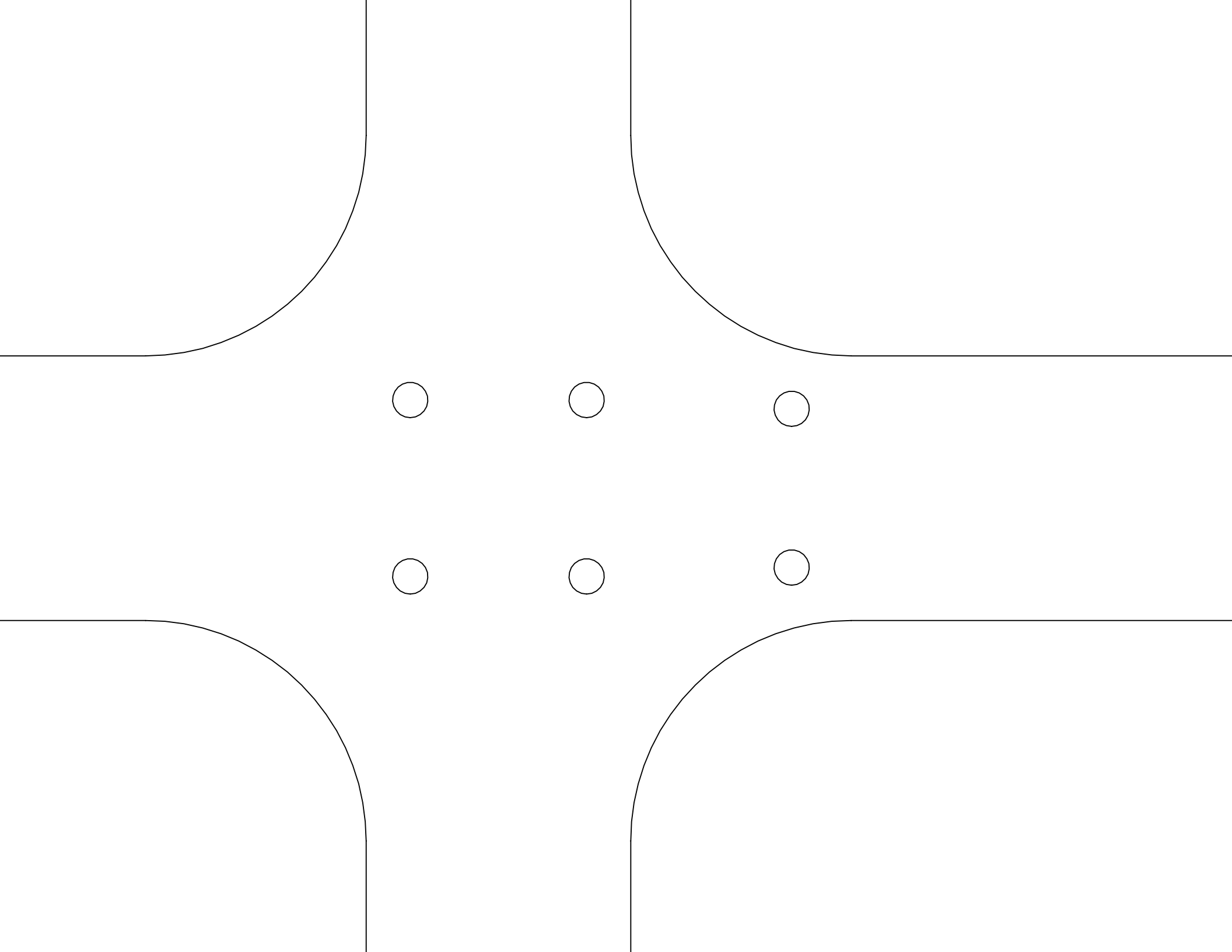
5 4 3 2 1