For SPI Boot,
IO2/IO8/IO9 must be pulled-up.

For Firmware Download,
IO9 must be pulled-down.

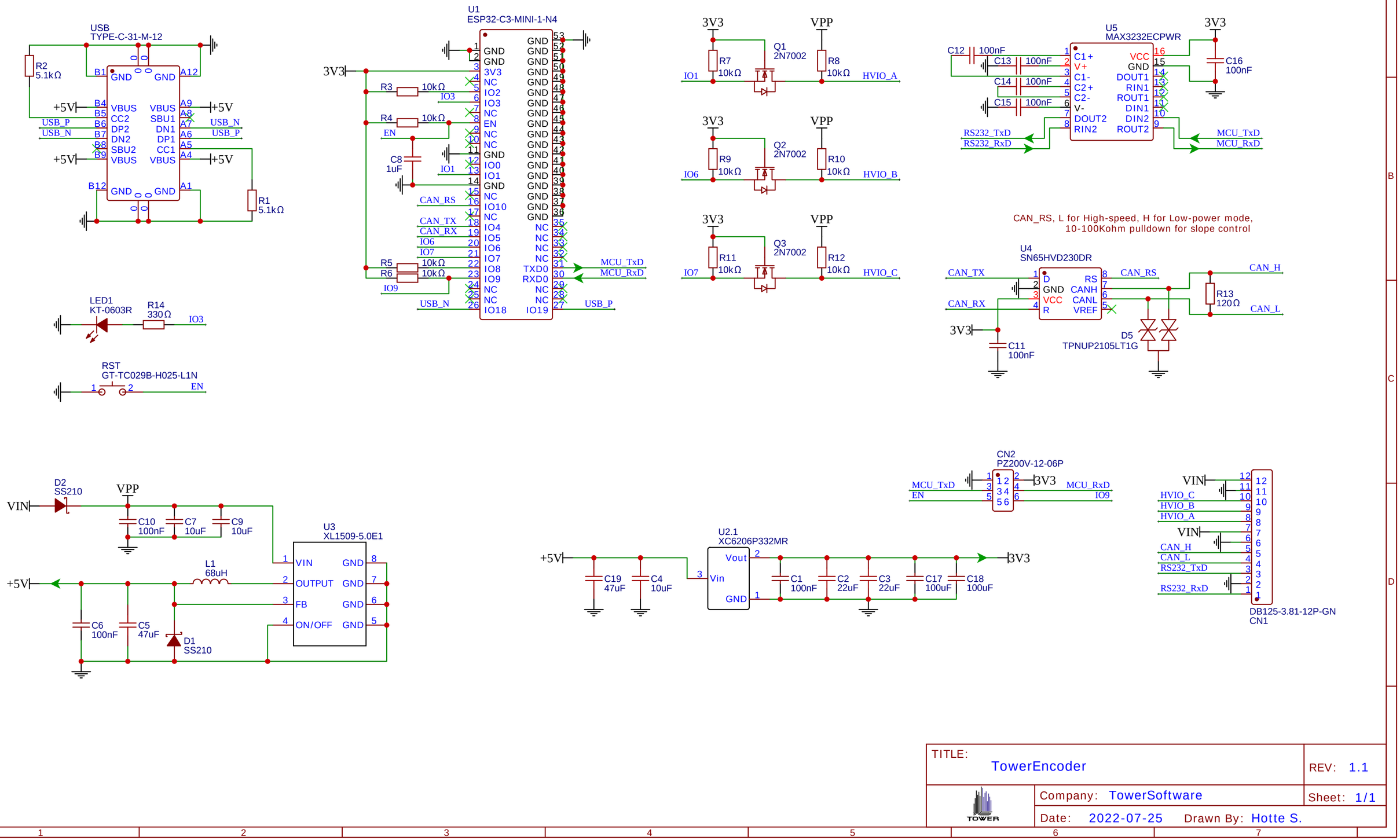

TITLE: TowerEncoder	REV: 1.1
Company: TowerSoftware	Sheet: 1/1
Date: 2022-07-25 Drawn By: Hotte S.	