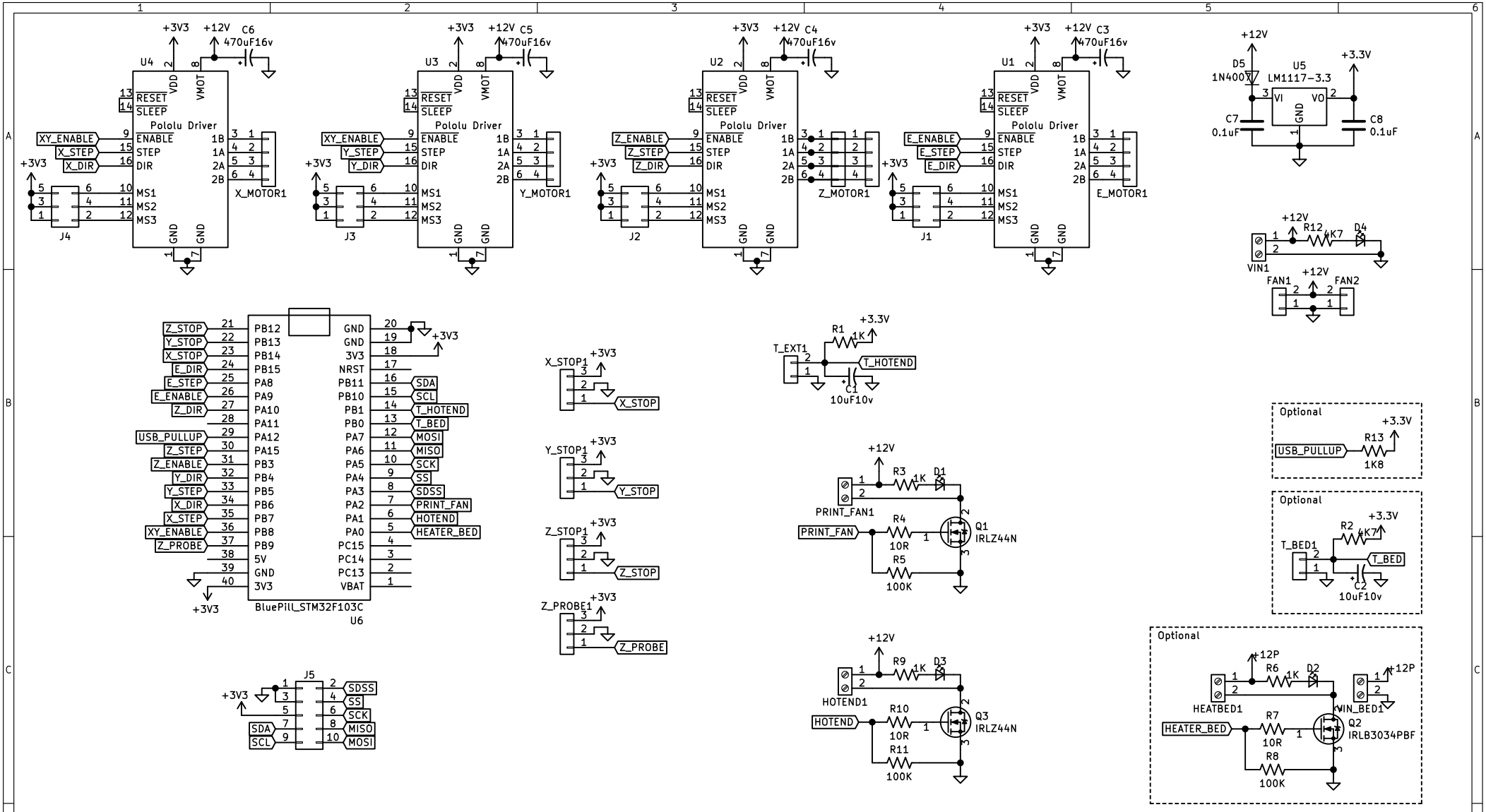

Released under GPLv3

Sheet: /

File: Morpheus-kicad.sch

Title: MORPHEUS Board by SPON!

Size: A4	Date:	Rev: 0.4
KiCad E.D.A. kicad (5.0.0)		Id: 1/1