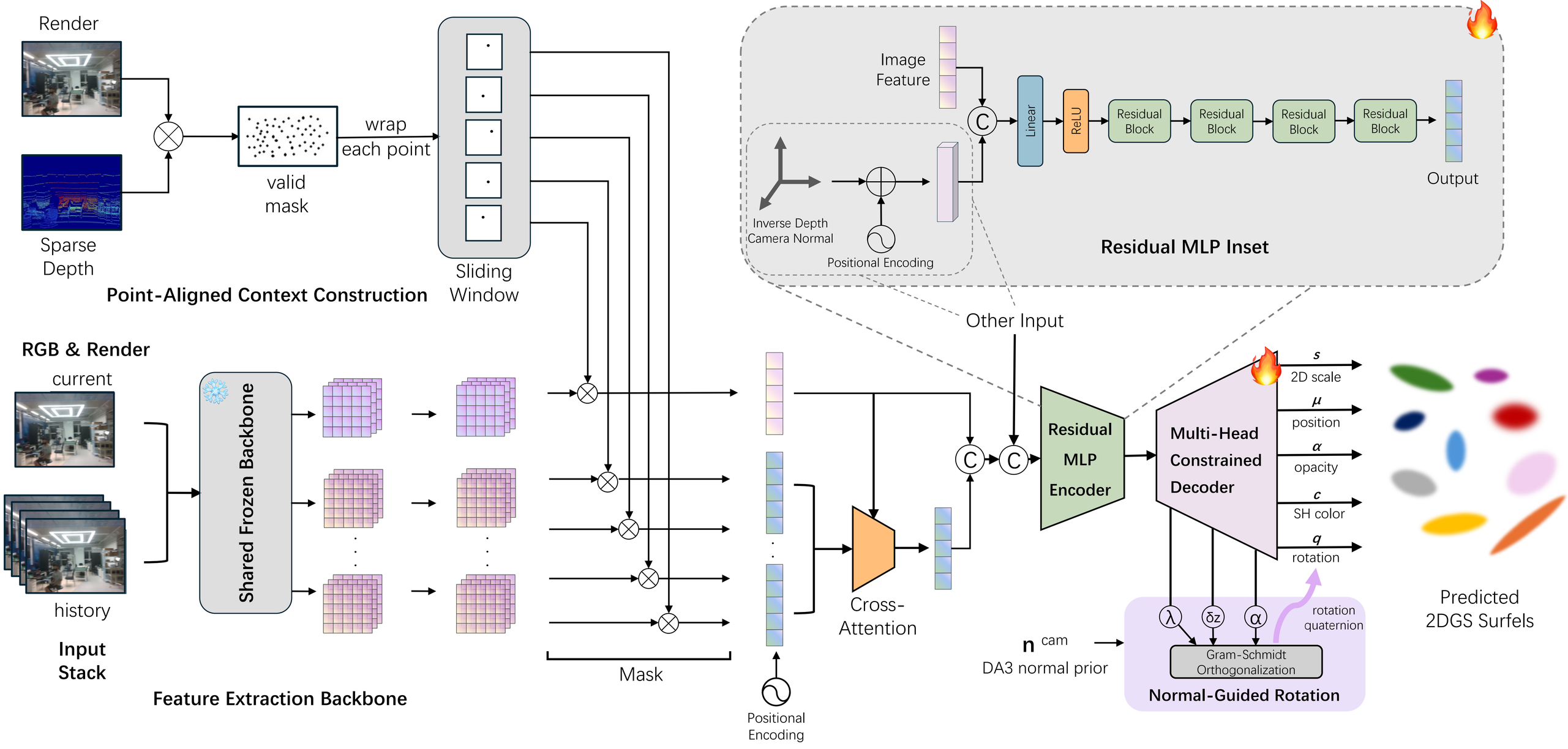
Render
Sparse Depth
valid mask
wrap each point
Sliding Window
Point-Aligned Context Construction
RGB & Render
current
history
Input Stack
Shared Frozen Backbone
Feature Extraction Backbone
Mask
Positional Encoding
Cross-Attention
Other Input
Image Feature
Inverse Depth
Camera Normal
Positional Encoding
Linear
ReLU
Residual Block
Residual Block
Residual Block
Residual Block
Output
Residual MLP Inset
Residual MLP Encoder
Multi-Head Constrained Decoder
s
2D scale
μ
position
α
opacity
c
SH color
q
rotation
n cam
DA3 normal prior
λ
δz
α
rotation quaternion
Gram-Schmidt Orthogonalization
Normal-Guided Rotation
Predicted 2DGS Surfels