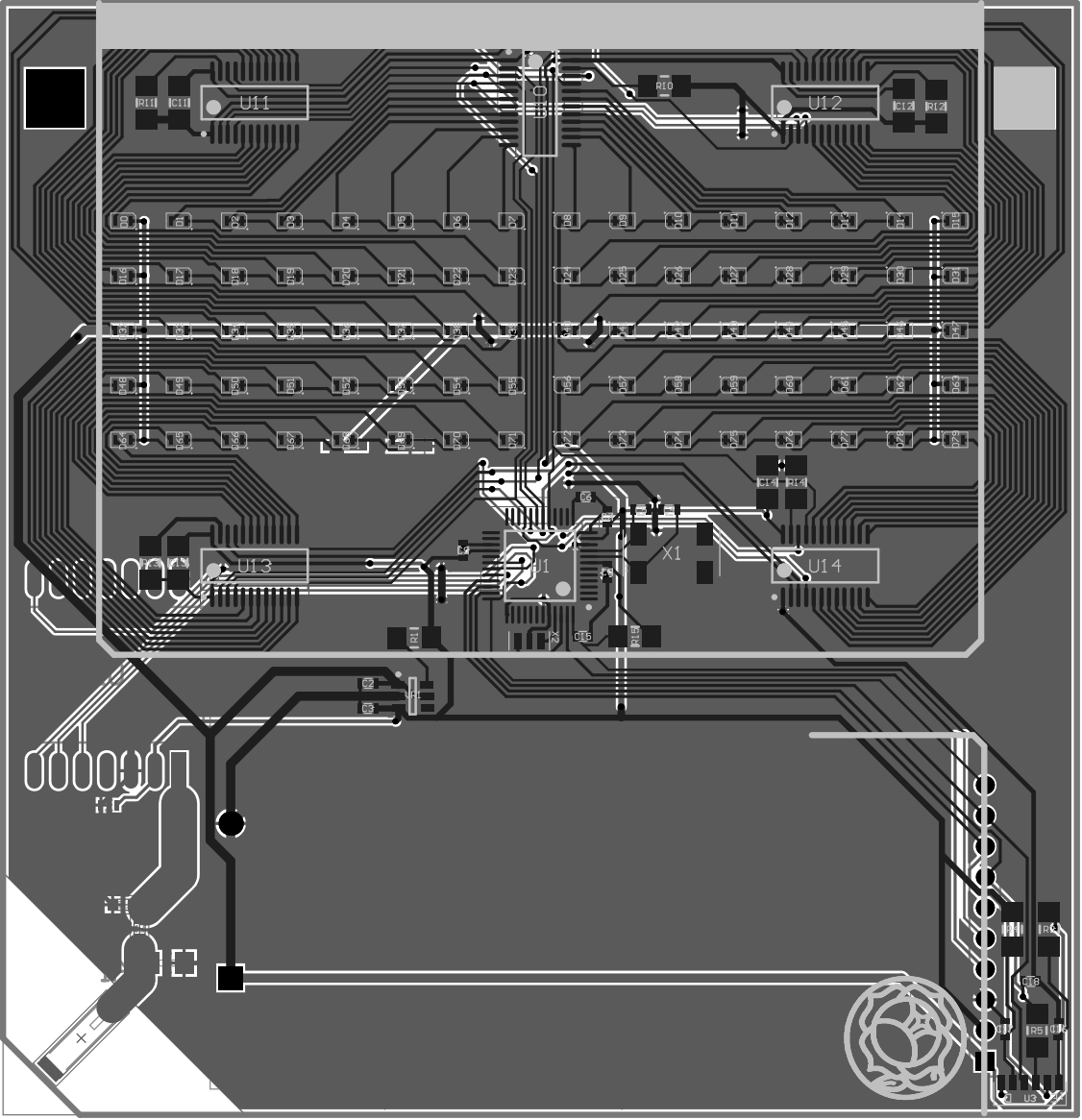
U11
U12
U13
U14
U1
X1
R11
C11
R10
C12
R12
C14
R14
R13
C13
R15
C15
R16
C16
R6
R5
U3

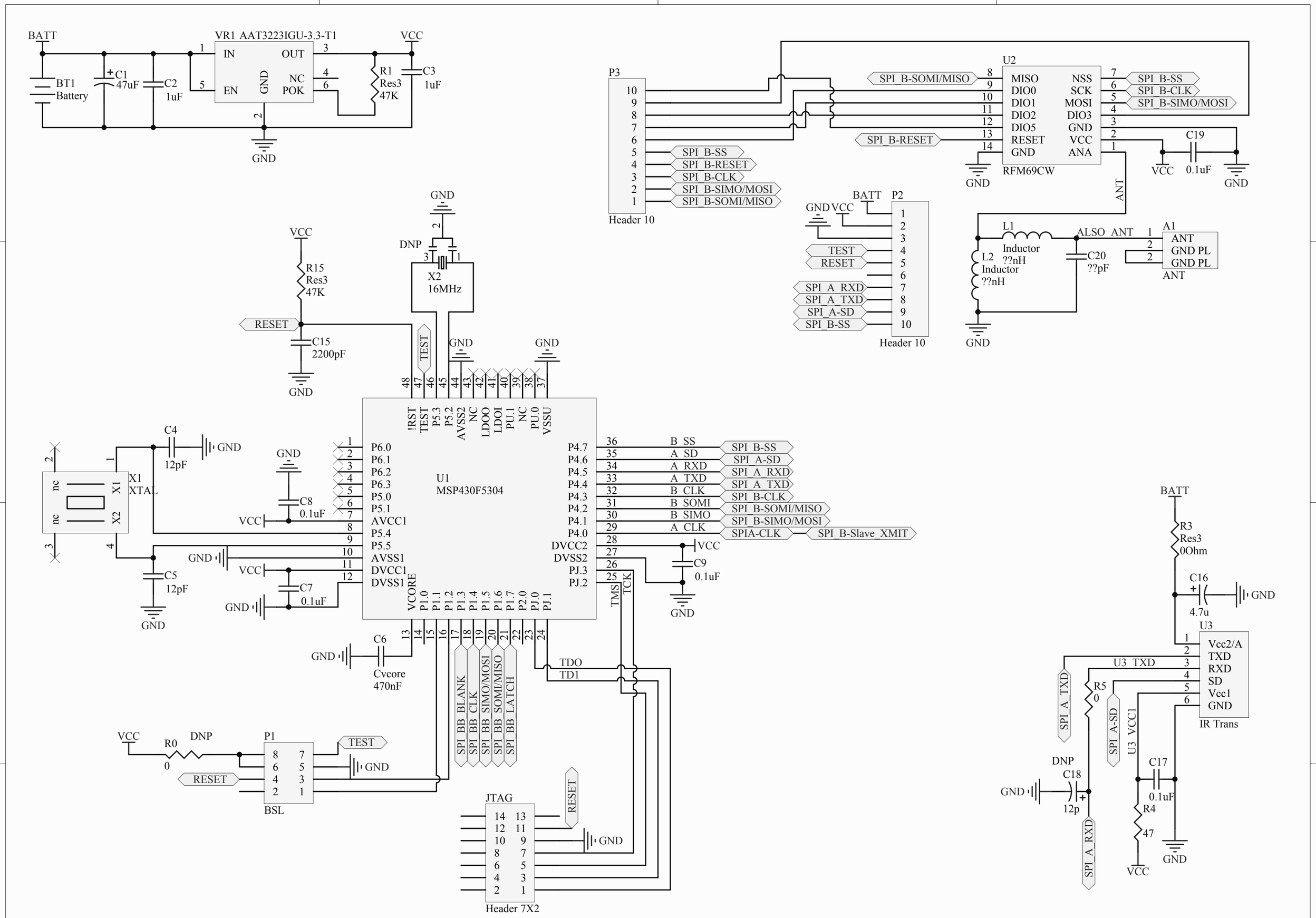

Title	*QC11 MCU and Comms*		*QC11*
Size: Letter	Number:*	Revision:A0	*
Date: 5/12/2014	Time: 8:56:53 PM	Sheet 1 of 2	*
File: D:\Documents\My Dropbox\QC11\QC11 (1-16-2014 5-35-22 PM)\Main 0A.SchDoc			*

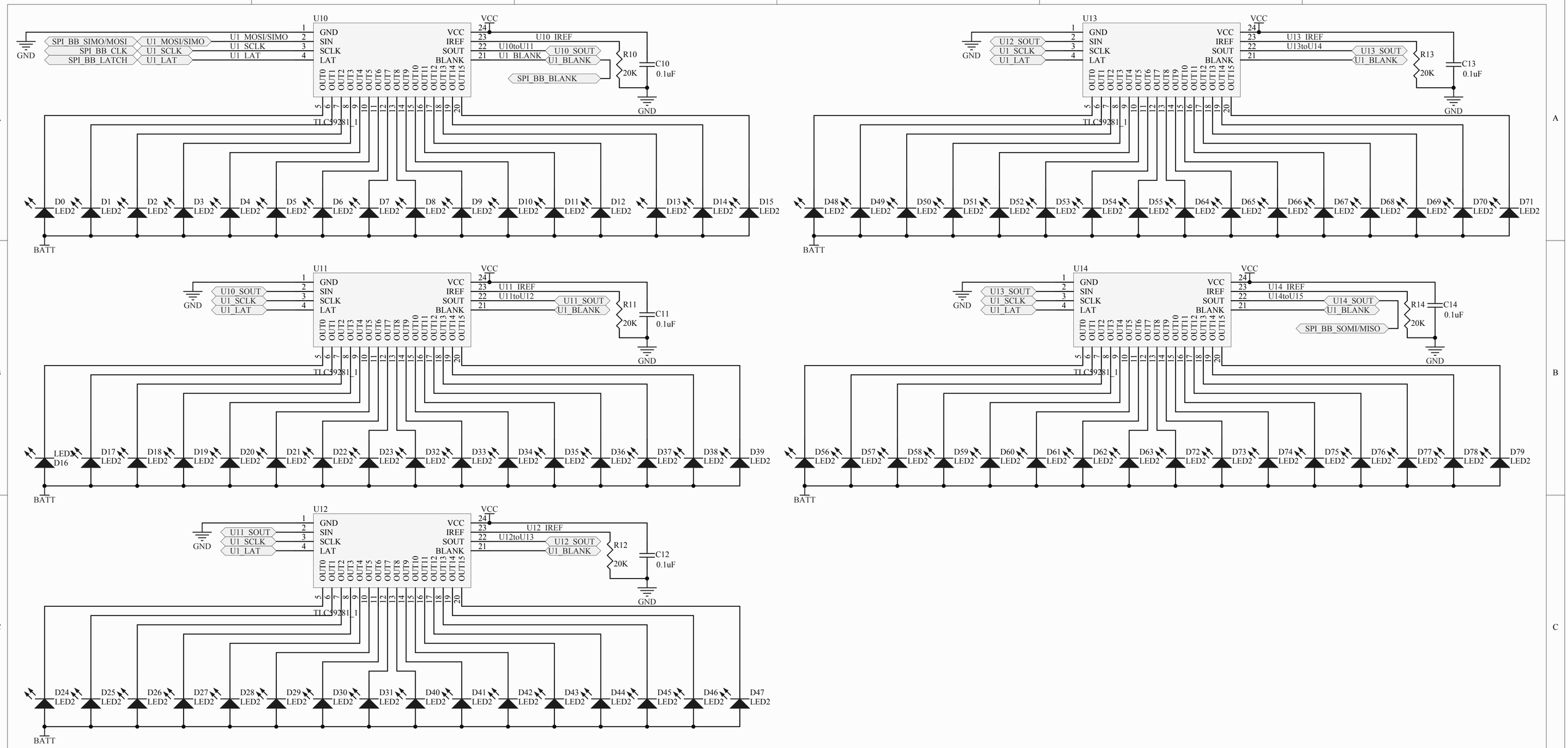

Title	*QC11 LEDs and Controllers*		*
Size: Tabloid	Number:*	Revision:A0	*
Date: 5/12/2014	Time: 8:56:54 PM	Sheet2 of 2	*
File: D:\Documents\My Dropbox\QC11\QC11 (1-16-2014 5-35-22 PM)\LEDs 0A.SchDoc			