GÄRLÄMPLI

Small Parts (1206)
R1-2: 2 x 22K Ω, 223 (Voltage dividers)
R3: 220 Ω - 1k Ω, 102 (LED current limiter)
R4: 100 Ω, 101 (NEO-Pixel data stabilizer)
R5: 4.7 Ω, 472 (Pull-up for temp. sensor)
C1: 10nF , 103 (SD-Prog de-coupling)
C2: 100nF, 104 (Voltage stabilization)
LED: Indicator for Programming (3825)
NEO-Pixel: RGB adressable (5050)

open source coconuts

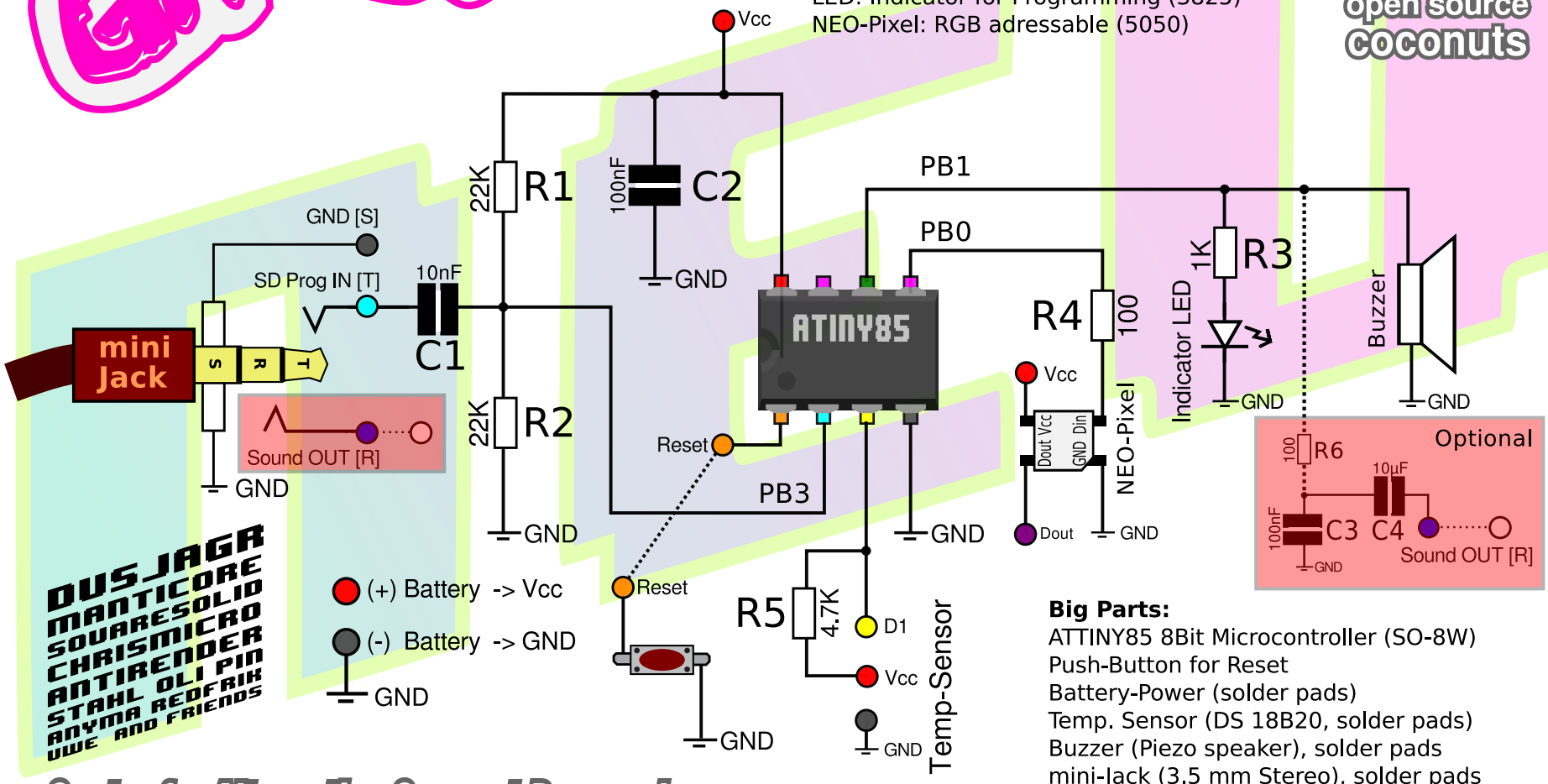

DUSJAGR
MANTICORE
SQUARESOLID
CHRISMICRO
ANTIRENDER
STAHL OLI PIN
ANYMA REDFRIK
UWE AND FRIENDS

Big Parts:
ATTINY85 8Bit Microcontroller (SO-8W)
Push-Button for Reset
Battery-Power (solder pads)
Temp. Sensor (DS 18B20, solder pads)
Buzzer (Piezo speaker), solder pads
mini-Jack (3.5 mm Stereo), solder pads

Center for Alternative Coconut Research

Version 0.2 - single sided PCB, hand-made, SMD 1206