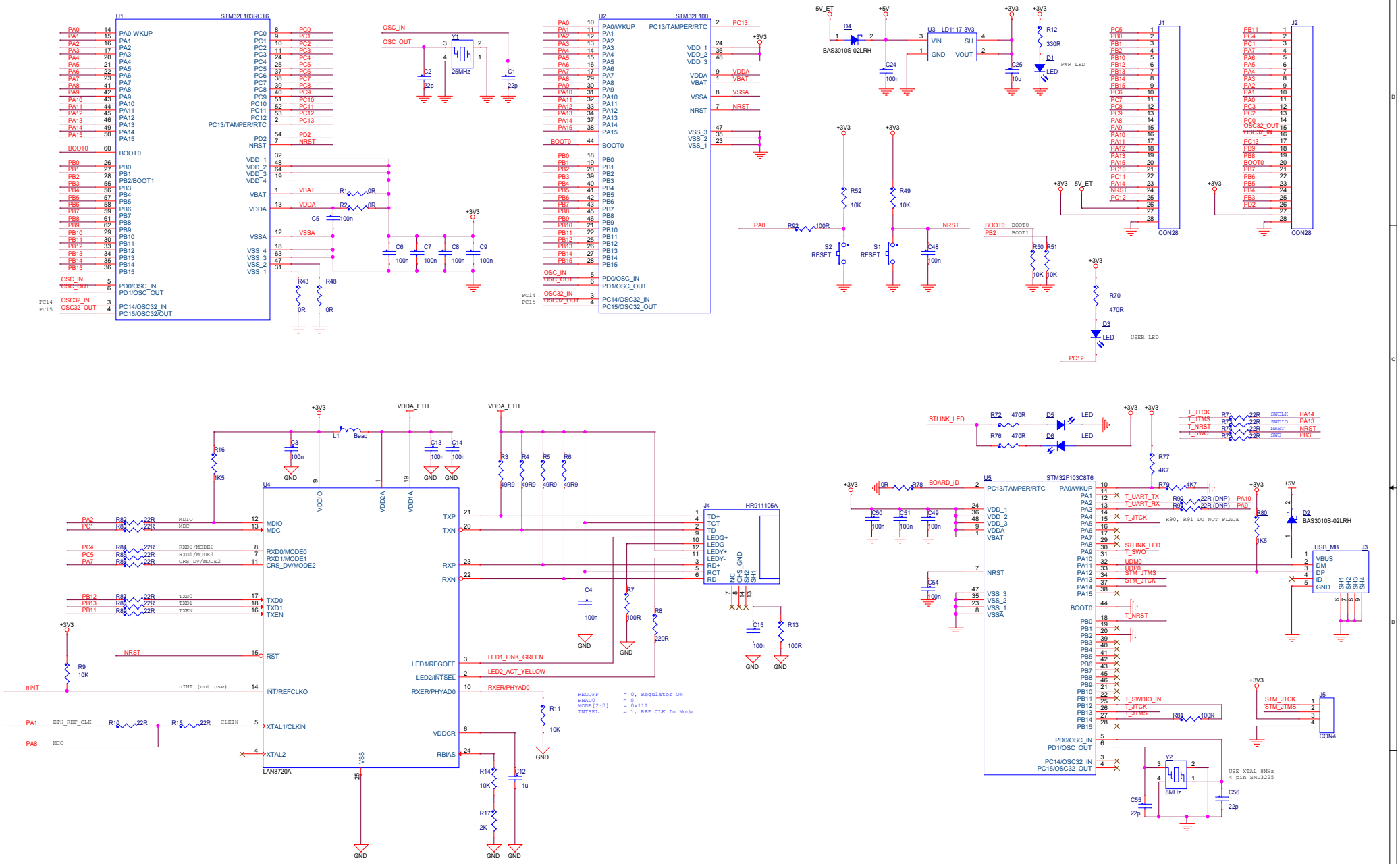
U1 STM32F103RCT6
U2 STM32F100
U3 LD1117-3V3
U4 LAN8720A
J1 CON28
J2 CON28
J3 USB_MB
J4 HR911105A
J5 CON4
U5 STM32F103C8T6
Y1 25MHz
Y2 8MHz
D1 PWR LED
D3 USER LED
D2 BAS3010S-02LRH
D4 BAS3010S-02LRH
D5 LED
D6 LED
S1 RESET
S2 RESET
REGOFF = 0, Regulator ON
PHAD0 = 0
MODE[2:0] = 0x111
INTSEL = 1, REF_CLK In Mode
USE XTAL 8MHz 4 pin SMD3225
R90, R91 DO NOT PLACE
Copy Right @ 2014 Dang Minh Phuong
Title
EASY_STM32
Size C
Document Number
<Doc>
Rev B
Date: Monday, December 29, 2014
Sheet 1 of 1