+5V to +3.3V LDO Regulator

PCB Design Report

First Altium Designer Project • April 2026

Project Overview

This project is a compact +5V to +3.3V Low Dropout (LDO) voltage regulator PCB designed as a first project in Altium Designer. The board converts 5V input power to a clean 3.3V output, suitable for powering microcontrollers, sensors, and other 3.3V logic devices. The design uses the MIC5317-3.3YM5-TR LDO regulator IC with input and output bypass capacitors, housed on a small form-factor PCB with JST-GH connectors on both sides.

Key Specifications:

- Input Voltage: +5V via JST-GH 2-pin connector (J1)
- Output Voltage: +3.3V via JST-GH 2-pin connector (J2)
- Regulator IC: MIC5317-3.3YM5-TR (SOT-23-5 package)
- Input/Output Capacitors: 1µF ceramic (C1, C2)
- PCB Finish: ENIG recommended
- Board Size: Compact single-layer routing

Schematic Design

The schematic was created in Altium Designer and follows a straightforward LDO topology. The MIC5317 regulator requires minimal external components — just an input bypass capacitor (C1) and output bypass capacitor (C2), both 1µF. The EN (enable) pin is tied directly to VIN, keeping the regulator always-on. The NC pin is left unconnected as specified in the datasheet.

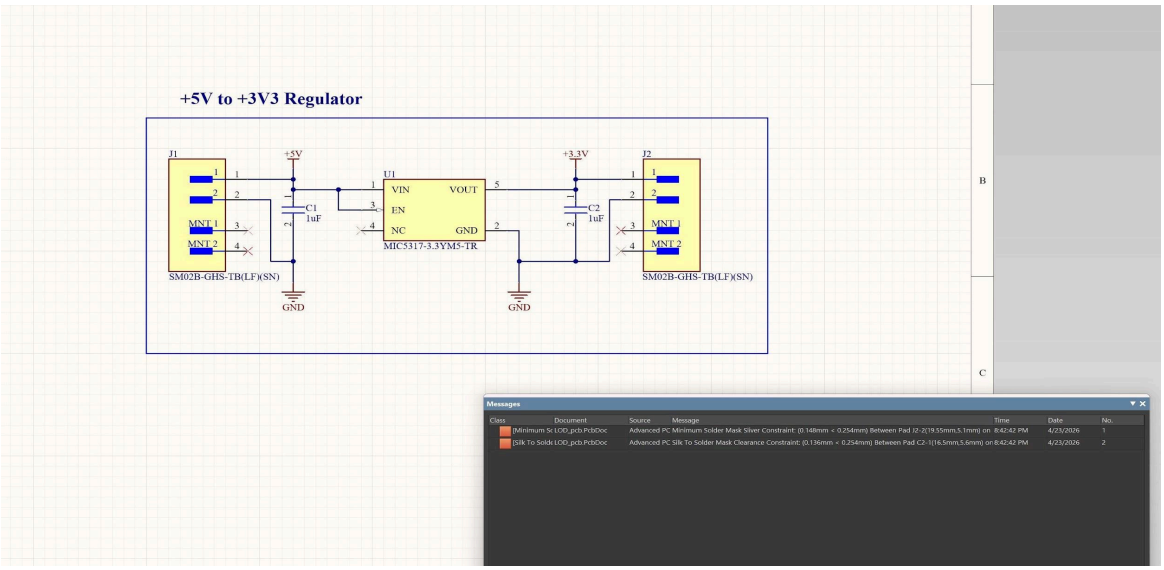

Figure 1: Schematic — +5V to +3.3V LDO Regulator with MIC5317

The two JST SM02B-GHS-TB(LF)(SN) connectors provide mechanical and electrical interfaces. J1 accepts the 5V input and J2 delivers the 3.3V output. Both connectors include mounting pads (MNT1, MNT2) for mechanical stability on the PCB.

PCB Layout

The PCB layout was completed in Altium Designer with all components placed compactly in a horizontal arrangement. The routing is done on the top copper layer using red traces. Vias are used to route GND connections. The board outline includes rounded corners for a clean aesthetic.

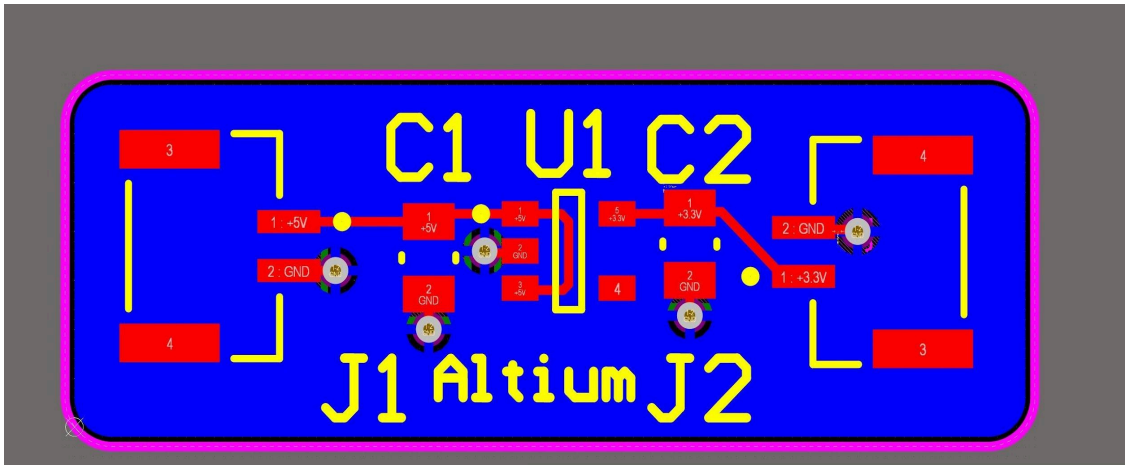

Figure 2: 2D PCB Layout — Top Copper Layer View

Component Placement Strategy:

- J1 (input connector) placed on the left edge for easy cable routing
- J2 (output connector) placed on the right edge, mirroring J1

- U1 (MIC5317) centered on the board for short trace runs to both capacitors
- C1 placed between J1 and U1, close to the VIN pin for effective input filtering
- C2 placed between U1 and J2, close to the VOUT pin for effective output filtering

Challenges & Solutions

Challenge 1: Solder Mask Sliver Violations

After completing the initial layout and running the Design Rule Check (DRC), two solder mask sliver violations appeared. The default Altium DRC rule requires a minimum 0.254mm sliver of solder mask between adjacent pad openings. The JST connector pads and the MIC5317 SOT-23-5 pads are closely spaced, resulting in slivers smaller than this threshold.

Solution: The minimum solder mask sliver rule was reduced from 0.254mm to 0.1mm via Design → Rules → MinimumSolderMaskSliver. This is well within the manufacturing capability of standard PCB fabricators such as JLCPCB and PCBWay, which can reliably produce 0.1mm slivers.

Challenge 2: Manual Solder Mask Expansion Overrides

During troubleshooting of the sliver errors, solder mask expansion values on several pads were accidentally set to manual overrides (0mm), which worsened the DRC violations by creating additional sliver conditions on U1 pads.

Solution: All manually overridden pads were reverted back to rule-driven expansion by selecting each pad and changing the Solder Mask Expansion dropdown from 'Manual' back to 'Rule' in the pad properties panel.

Challenge 3: Silk to Solder Mask Clearance

A silkscreen element on capacitor C2 was overlapping too close to pad C2-1, triggering a Silk to Solder Mask clearance violation. The default rule required 0.254mm clearance between silkscreen and pad edges.

Solution: The Silk to Solder Mask Clearance rule was reduced to 0.1mm, consistent with the updated sliver rule and standard fab capabilities.

Challenge 4: Via Placement Near Connector Pad

A GND via on J2 was placed too close to pad 2, contributing to the solder mask sliver condition. The via's solder mask ring was nearly touching the connector pad's mask opening.

Solution: The via was moved further away from the J2 pad to provide adequate solder mask spacing. After moving the via, the trace width between the pad and via needed to be corrected back to a standard width (0.254mm) as it had expanded unexpectedly during the move.

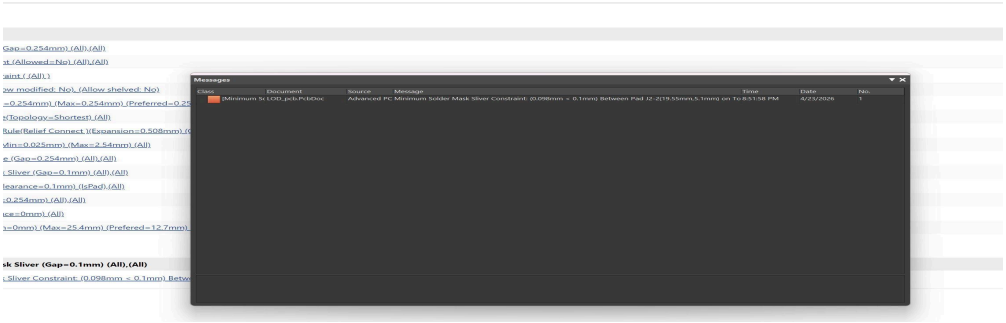

Figure 3: DRC Messages Panel — Zero Errors After All Fixes Applied

PCB Design Best Practices Applied

Decoupling Capacitors

Input and output bypass capacitors (C1 and C2) are placed as close as possible to the VIN and VOUT pins of U1. This minimizes parasitic inductance in the power supply loop and ensures the LDO remains stable under load transients. 1μF ceramic capacitors are used as recommended by the MIC5317 datasheet.

Component Orientation & Symmetry

Components are oriented consistently and the board layout follows a logical left-to-right signal flow — 5V enters from J1 on the left, is regulated by U1 in the center, and 3.3V exits from J2 on the right. This makes the board intuitive to understand and troubleshoot.

DRC-Driven Design

The Design Rule Check was used iteratively throughout the design process rather than only at the end. Running DRC early and often allowed issues to be caught and fixed before they compounded into larger problems.

Rule Calibration for Fabrication

Default Altium DRC rules are often more conservative than what modern PCB fabs can actually produce. Rules were calibrated to match the real capabilities of standard fabs (0.1mm solder mask sliver, 0.1mm silk clearance) rather than leaving overly strict defaults that would generate false violations.

Silkscreen Customization

A custom silkscreen label was added to the board using the Top Overlay layer. A white filled rectangle was placed as a background, with inverted text overlaid to create a professional logo-style label. This demonstrates understanding of how silkscreen, solder mask, and copper layers interact visually on a finished PCB.

3D Verification

The 3D view in Altium Designer was used to verify the final board appearance before fabrication. This helps catch visual issues such as component clearances, connector orientations, and silkscreen placement that are harder to spot in the 2D view.

Final Board

The completed PCB passed DRC with zero violations. The 3D render below shows the final board with all components placed, traces routed, and custom silkscreen applied.

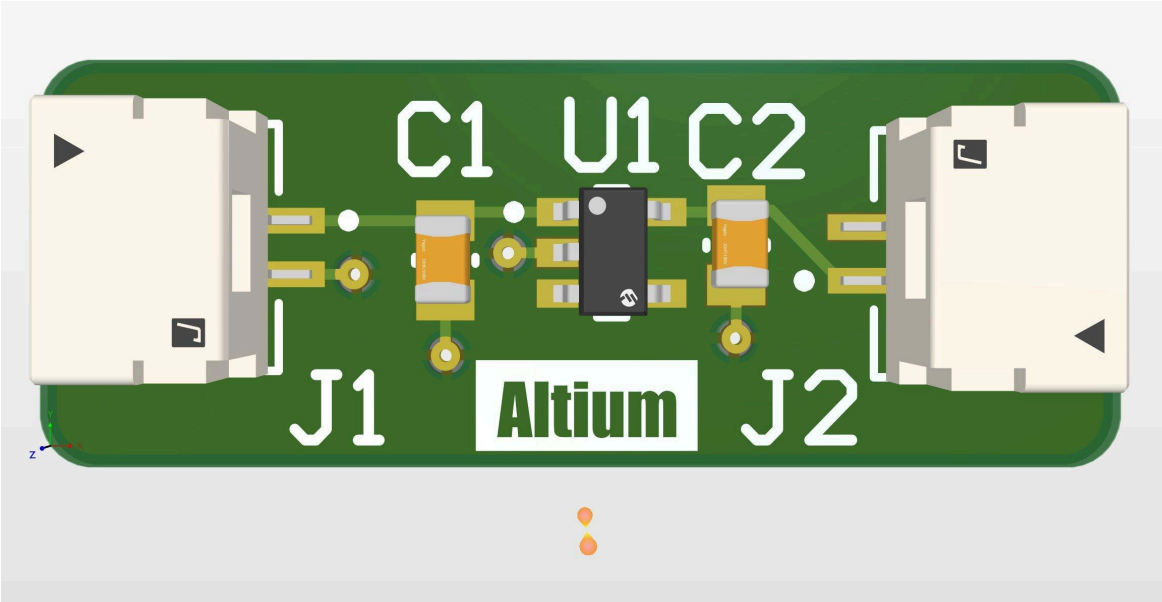

Figure 4: Final 3D Render — Completed +5V to +3.3V Regulator PCB

Lessons Learned

- Altium's default DRC rules are a starting point, not absolute requirements — always calibrate them to your target fabricator's actual capabilities.
- Solder mask expansion should be left as rule-driven on all pads unless there is a specific reason to override it manually.
- Via placement matters — vias placed too close to component pads can cause solder mask sliver violations even when the pads themselves are compliant.
- The 3D view is a powerful verification tool and should be checked before finalizing any board for fabrication.
- Small form-factor designs require careful attention to pad spacing and silkscreen clearances due to the density of features in a small area.
- Understanding which Altium layer does what (Top Overlay = silkscreen, Top Solder = mask opening, Top Copper = copper) is fundamental to creating correct and intentional PCB artwork.

- Running DRC iteratively during layout — not just at the end — saves significant time and prevents compounding errors.

Next Steps

When ready to fabricate this board, the following steps should be completed:

- Export Gerber files: File → Fabrication Outputs → Gerber Files
- Export drill files: File → Fabrication Outputs → NC Drill Files
- Review Gerbers in a viewer (e.g., gerbv or the fab's online viewer) before uploading
- Consider ENIG surface finish for best appearance and solderability
- Order from JLCPCB, PCBWay, or similar standard PCB fab