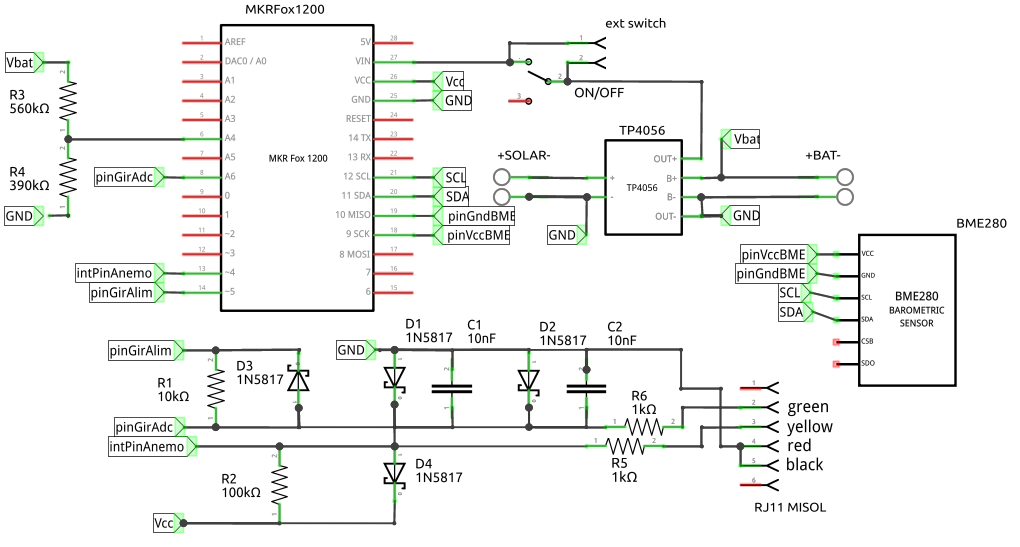
MKRFox1200
MKR Fox 1200
AREF
DAC0 / A0
A1
A2
A3
A4
A5
A6
0
1
~2
~3
~4
~5
5V
VIN
VCC
GND
RESET
14 TX
13 RX
12 SCL
11 SDA
10 MISO
9 SCK
8 MOSI
7
6
Vbat
R3
560kΩ
R4
390kΩ
GND
pinGirAdc
intPinAnemo
pinGirAlim
Vcc
GND
SCL
SDA
pinGndBME
pinVccBME
ext switch
ON/OFF
TP4056
+SOLAR-
OUT+
B+
B-
OUT-
Vbat
+BAT-
GND
BME280
pinVccBME
pinGndBME
SCL
SDA
VCC
GND
SCL
SDA
CSB
SDO
BME280
BAROMETRIC
SENSOR
pinGirAlim
R1
10kΩ
D3
1N5817
pinGirAdc
intPinAnemo
R2
100kΩ
Vcc
GND
D1
1N5817
C1
10nF
D2
1N5817
C2
10nF
D4
1N5817
R6
1kΩ
R5
1kΩ
green
yellow
red
black
RJ11 MISOL
fritzing