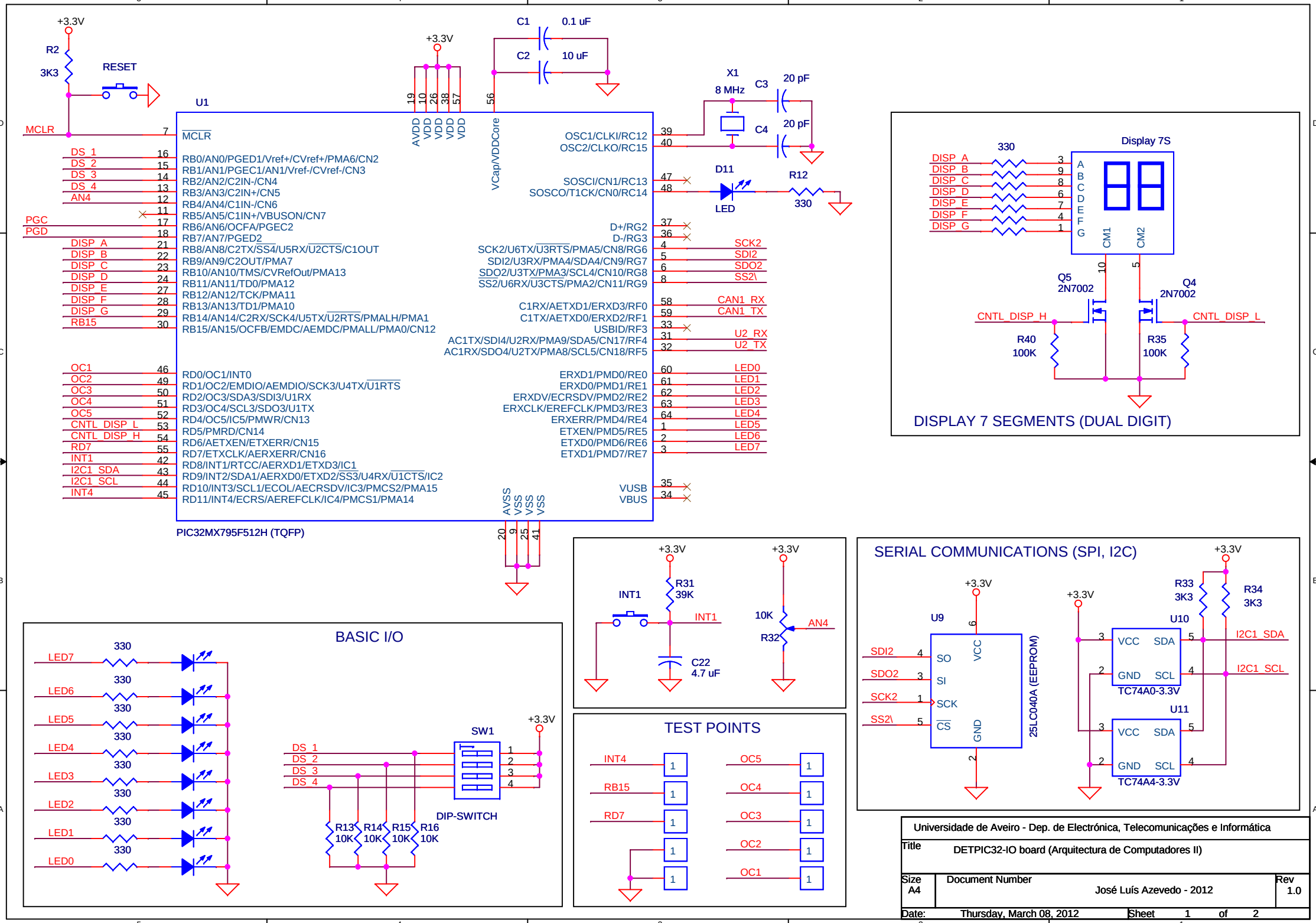
+3.3V
R2
3K3
RESET
MCLR
U1
C1
0.1 uF
C2
10 uF
X1
8 MHz
C3
20 pF
C4
20 pF
D11
LED
R12
330
DS_1
DS_2
DS_3
DS_4
AN4
PGC
PGD
DISP_A
DISP_B
DISP_C
DISP_D
DISP_E
DISP_F
DISP_G
RB15
OC1
OC2
OC3
OC4
OC5
CNTL_DISP_L
CNTL_DISP_H
RD7
INT1
I2C1_SDA
I2C1_SCL
INT4
SCK2
SDI2
SDO2
SS2\
CAN1_RX
CAN1_TX
U2_RX
U2_TX
LED0
LED1
LED2
LED3
LED4
LED5
LED6
LED7
PIC32MX795F512H (TQFP)
Display 7S
Q5
2N7002
Q4
2N7002
R40
100K
R35
100K
DISPLAY 7 SEGMENTS (DUAL DIGIT)
R31
39K
C22
4.7 uF
10K
R32
BASIC I/O
SW1
DIP-SWITCH
R13
10K
R14
10K
R15
10K
R16
10K
TEST POINTS
SERIAL COMMUNICATIONS (SPI, I2C)
U9
25LC040A (EEPROM)
U10
TC74A0-3.3V
U11
TC74A4-3.3V
R33
3K3
R34
3K3
Universidade de Aveiro - Dep. de Electrónica, Telecomunicações e Informática
Title
DETPIC32-IO board (Arquitectura de Computadores II)
Size
A4
Document Number
José Luís Azevedo - 2012
Rev
1.0
Date:
Thursday, March 08, 2012
Sheet
1
of
2