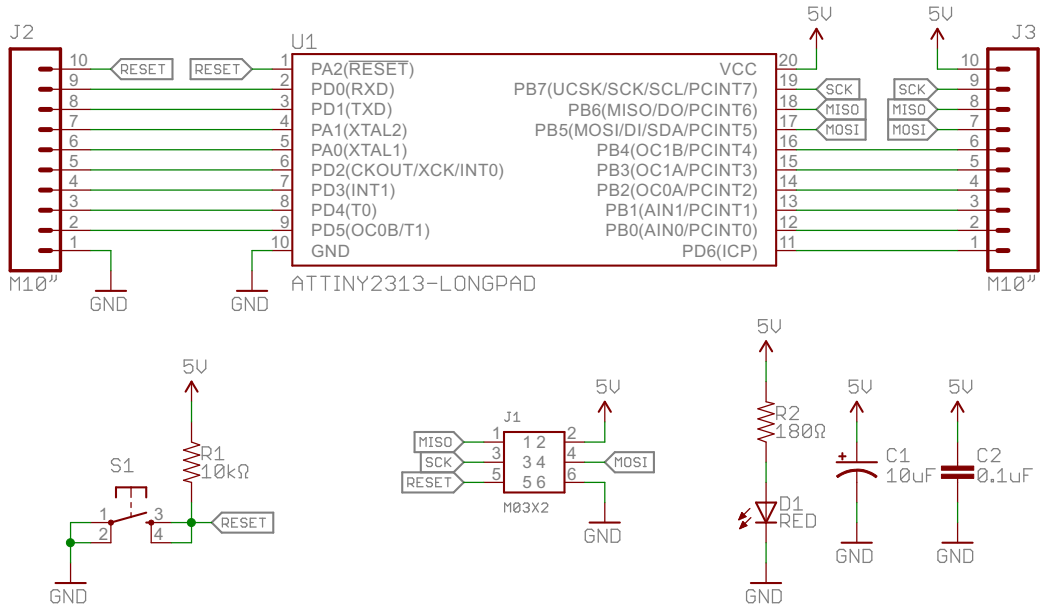

Released under the Creative Commons
Attribution Share-Alike 3.0 License
http://creativecommons.org/licenses/by-sa/3.0

TITLE: ATTiny2313_ISP

Design by: David Freitag

REV: A

Date: 12/2/2013 9:22:11 PM

Sheet: 1/1

open hardware