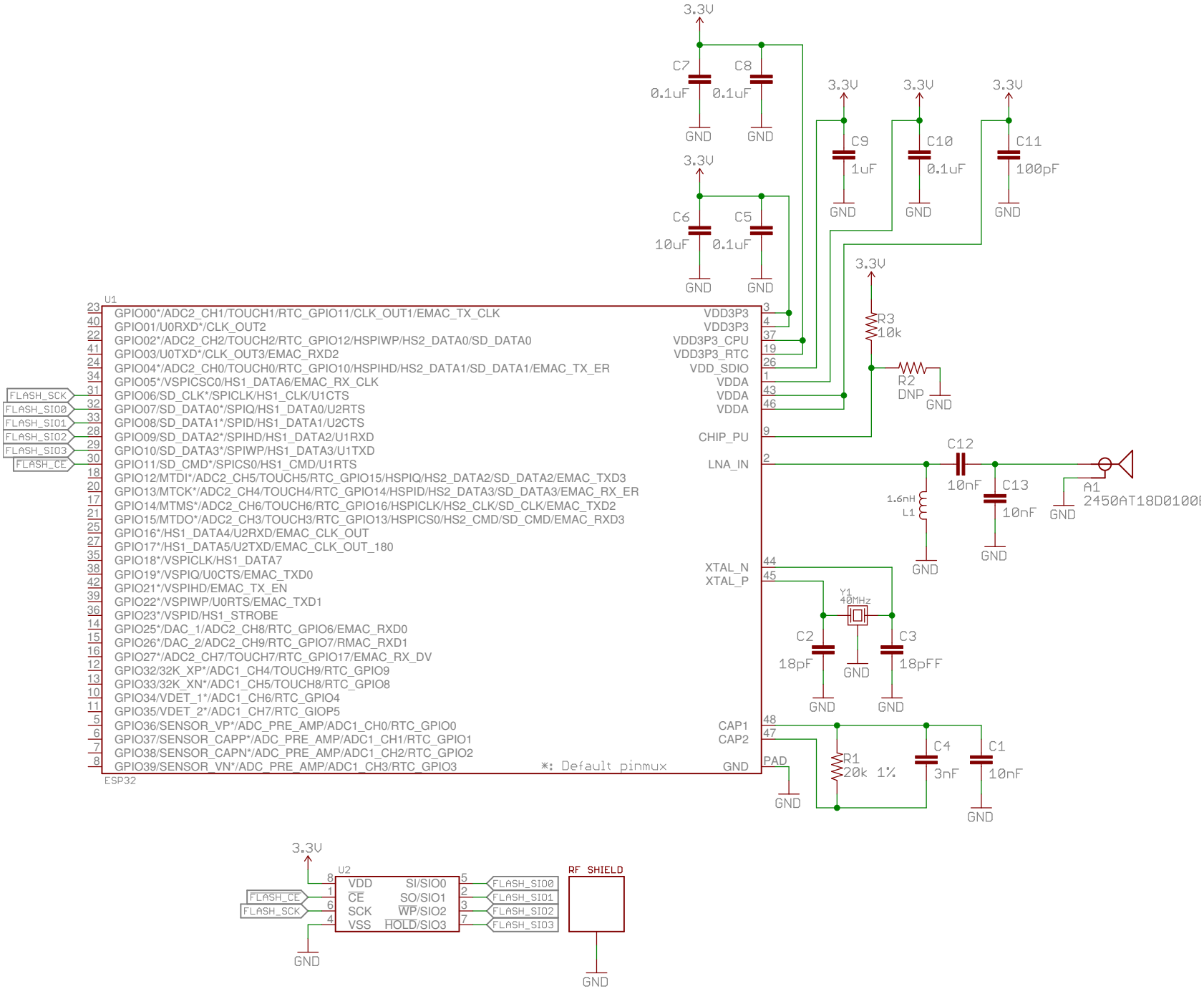
U1
ESP32
GPIO00*/ADC2_CH1/TOUCH1/RTC_GPIO11/CLK_OUT1/EMAC_TX_CLK
GPIO01/U0RXD*/CLK_OUT2
GPIO02*/ADC2_CH2/TOUCH2/RTC_GPIO12/HSPIWP/HS2_DATA0/SD_DATA0
GPIO03/U0TXD*/CLK_OUT3/EMAC_RXD2
GPIO04*/ADC2_CH0/TOUCH0/RTC_GPIO10/HSPIHD/HS2_DATA1/SD_DATA1/EMAC_TX_ER
GPIO05*/VSPICSC0/HS1_DATA6/EMAC_RX_CLK
GPIO06/SD_CLK*/SPICLK/HS1_CLK/U1CTS
GPIO07/SD_DATA0*/SPIQ/HS1_DATA0/U2RTS
GPIO08/SD_DATA1*/SPID/HS1_DATA1/U2CTS
GPIO09/SD_DATA2*/SPIHD/HS1_DATA2/U1RXD
GPIO10/SD_DATA3*/SPIWP/HS1_DATA3/U1TXD
GPIO11/SD_CMD*/SPICS0/HS1_CMD/U1RTS
GPIO12/MTDI*/ADC2_CH5/TOUCH5/RTC_GPIO15/HSPIQ/HS2_DATA2/SD_DATA2/EMAC_TXD3
GPIO13/MTCK*/ADC2_CH4/TOUCH4/RTC_GPIO14/HSPID/HS2_DATA3/SD_DATA3/EMAC_RX_ER
GPIO14/MTMS*/ADC2_CH6/TOUCH6/RTC_GPIO16/HSPICLK/HS2_CLK/SD_CLK/EMAC_TXD2
GPIO15/MTDO*/ADC2_CH3/TOUCH3/RTC_GPIO13/HSPICS0/HS2_CMD/SD_CMD/EMAC_RXD3
GPIO16*/HS1_DATA4/U2RXD/EMAC_CLK_OUT
GPIO17*/HS1_DATA5/U2TXD/EMAC_CLK_OUT_180
GPIO18*/VSPICLK/HS1_DATA7
GPIO19*/VSPIQ/U0CTS/EMAC_TXD0
GPIO21*/VSPIHD/EMAC_TX_EN
GPIO22*/VSPIWP/U0RTS/EMAC_TXD1
GPIO23*/VSPID/HS1_STROBE
GPIO25*/DAC_1/ADC2_CH8/RTC_GPIO6/EMAC_RXD0
GPIO26*/DAC_2/ADC2_CH9/RTC_GPIO7/RMAC_RXD1
GPIO27*/ADC2_CH7/TOUCH7/RTC_GPIO17/EMAC_RX_DV
GPIO32/32K_XP*/ADC1_CH4/TOUCH9/RTC_GPIO9
GPIO33/32K_XN*/ADC1_CH5/TOUCH8/RTC_GPIO8
GPIO34/VDET_1*/ADC1_CH6/RTC_GPIO4
GPIO35/VDET_2*/ADC1_CH7/RTC_GIOP5
GPIO36/SENSOR_VP*/ADC_PRE_AMP/ADC1_CH0/RTC_GPIO0
GPIO37/SENSOR_CAPP*/ADC_PRE_AMP/ADC1_CH1/RTC_GPIO1
GPIO38/SENSOR_CAPN*/ADC_PRE_AMP/ADC1_CH2/RTC_GPIO2
GPIO39/SENSOR_VN*/ADC_PRE_AMP/ADC1_CH3/RTC_GPIO3
*: Default pinmux
VDD3P3
VDD3P3
VDD3P3_CPU
VDD3P3_RTC
VDD_SDIO
VDDA
VDDA
VDDA
CHIP_PU
LNA_IN
XTAL_N
XTAL_P
CAP1
CAP2
GND
PAD
FLASH_SCK
FLASH_SIO0
FLASH_SIO1
FLASH_SIO2
FLASH_SIO3
FLASH_CE
3.3V
C7 0.1uF
C8 0.1uF
C6 10uF
C5 0.1uF
C9 1uF
C10 0.1uF
C11 100pF
R3 10k
R2 DNP
C12 10nF
C13 10nF
1.6nH L1
A1 2450AT18D0100
Y1 40MHz
C2 18pF
C3 18pFF
R1 20k 1%
C4 3nF
C1 10nF
GND
U2
VDD
CE
SCK
VSS
SI/SIO0
SO/SIO1
WP/SIO2
HOLD/SIO3
RF SHIELD