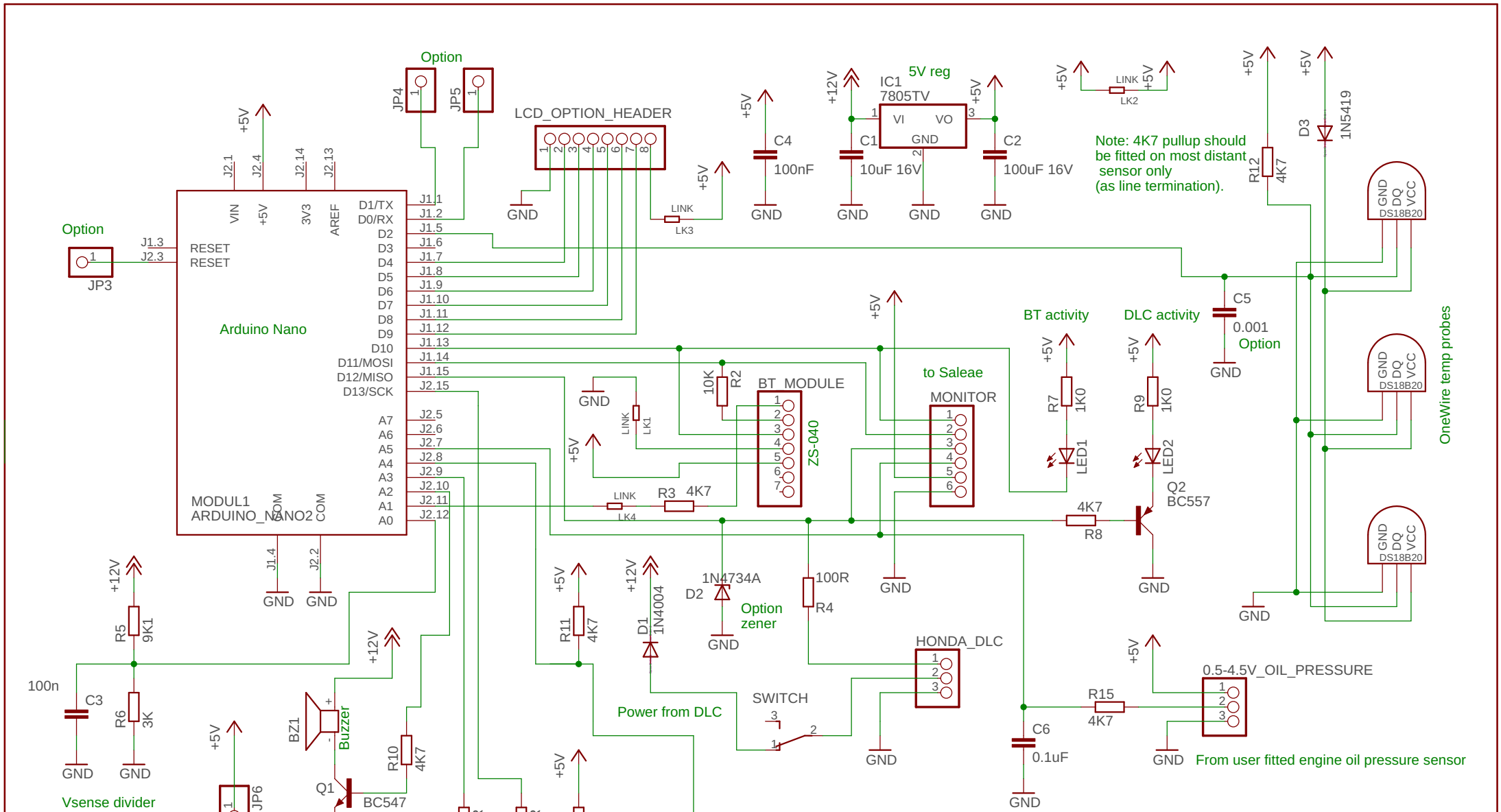
Option
JP4
JP5
LCD_OPTION_HEADER
5V reg
IC1
7805TV
VI
VO
GND
C1
10uF 16V
C2
100uF 16V
C4
100nF
LINK
LK2
LK3
LK1
LK4
Note: 4K7 pullup should be fitted on most distant sensor only (as line termination).
R12
4K7
D3
1N5419
DS18B20
GND
DQ
VCC
OneWire temp probes
C5
0.001
Option
Option
JP3
RESET
RESET
Arduino Nano
MODUL1
ARDUINO_NANO2
VIN
3V3
AREF
COM
D1/TX
D0/RX
D11/MOSI
D12/MISO
D13/SCK
BT_MODULE
ZS-040
10K
R2
R3
4K7
to Saleae
MONITOR
BT activity
DLC activity
R7
1K0
R9
1K0
LED1
LED2
Q2
BC557
R8
4K7
R5
9K1
R6
3K
C3
100n
Vsense divider
BZ1
Buzzer
Q1
BC547
R10
4K7
JP6
Alternate buzzer voltage.
R11
4K7
D1
1N4004
D2
1N4734A
Option zener
R4
100R
Power from DLC
SWITCH
HONDA_DLC
R15
4K7
C6
0.1uF
0.5-4.5V_OIL_PRESSURE
From user fitted engine oil pressure sensor
R1
500R
R13
500R
R14
47K
LED3
LED4
LED5
Red LED
Blue LED
Green LED
5mm RGB LED
BUTTON
User button
LCD is optional. Use Arduino Nano sketch to match.
JP1 - JP5 are optional breakout pins.
TITLE: HondaOBD_Extra_BT_only_rev3
Document Number:
Honda DLC to ELM327 OBDII
REV:
3.0
Date: 18-Aug-18 11:45 PM
Sheet: 1/1