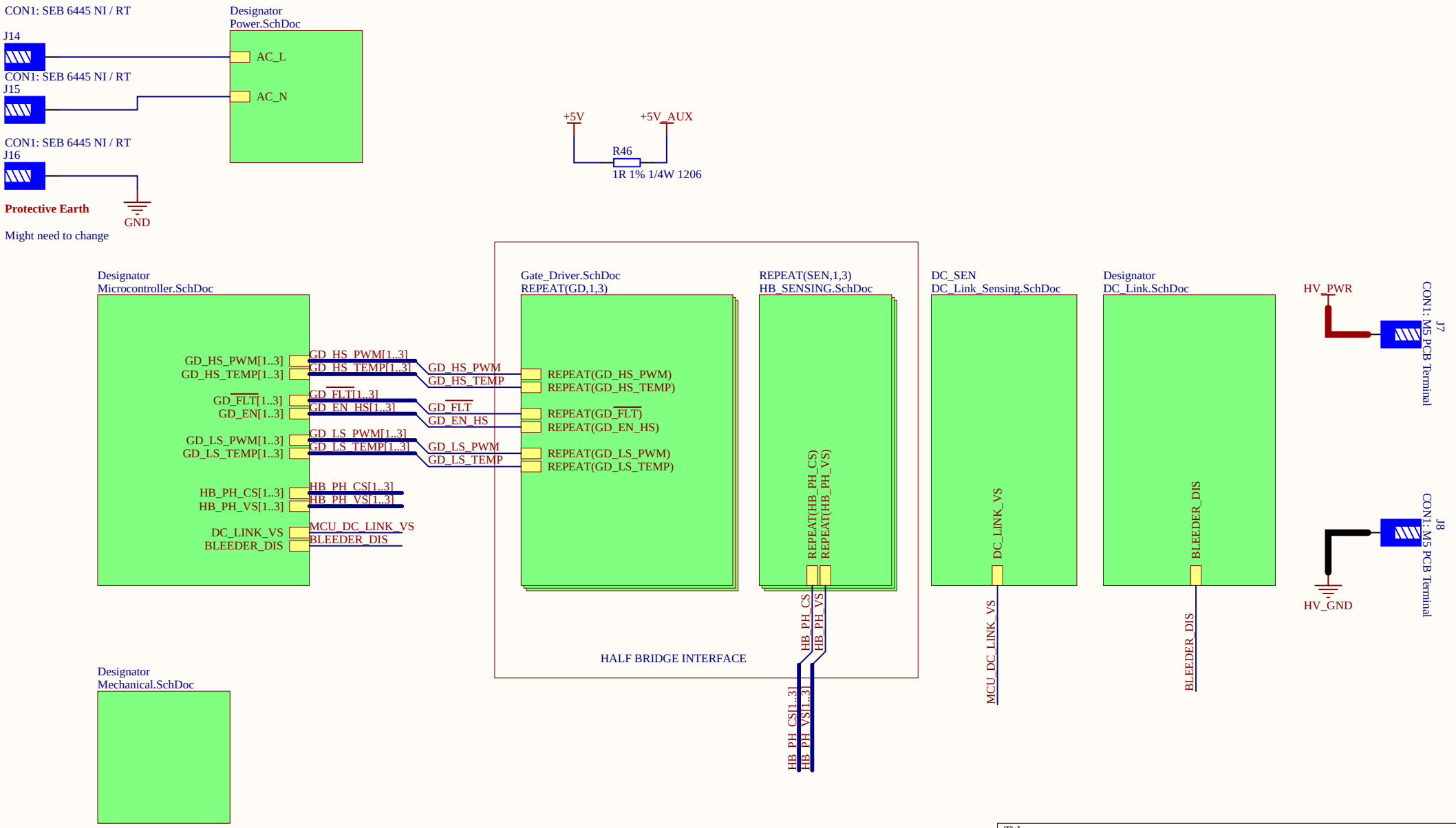

Title		
Size A4	Number	Revision
Date: 3-24-2026	Sheet of	
File: C:\Users\..\Control_Board_SCH.SchDoc	Drawn By:	

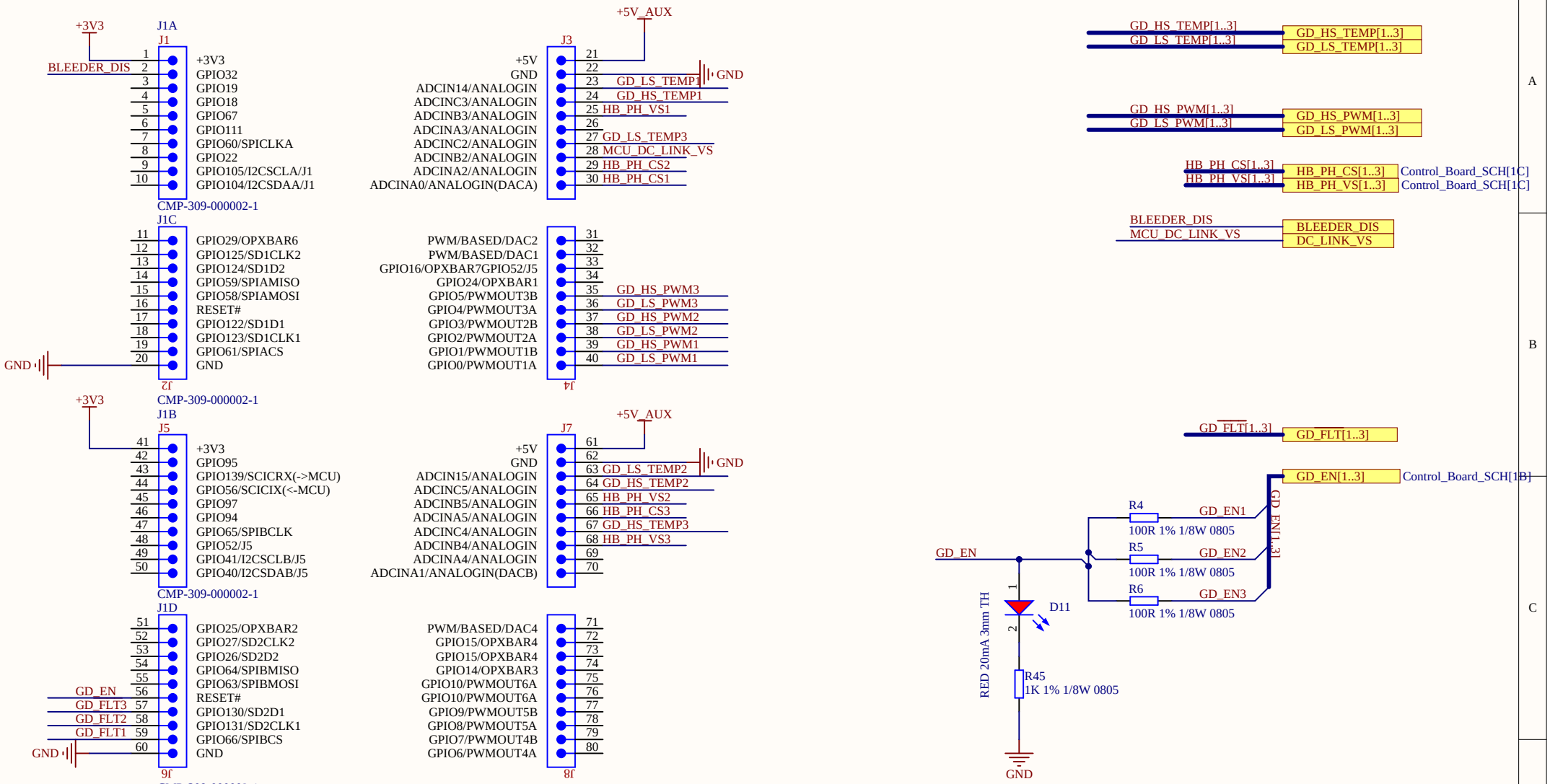

Title		
Size A4	Number	Revision
Date: 3-24-2026		Sheet of
File: C:\Users\..\Microcontroller.SchDoc		Drawn By:

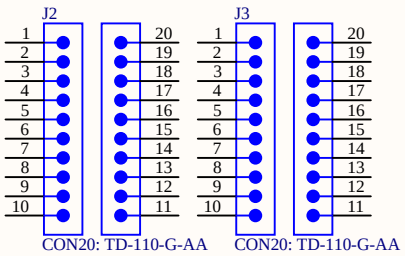

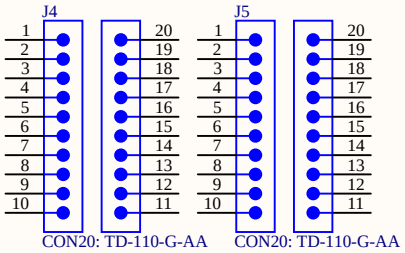

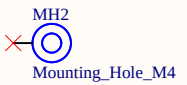

Title		
Size A4	Number	Revision
Date: 3-24-2026		Sheet of
File: C:\Users\..\Mechanical.SchDoc		Drawn By:

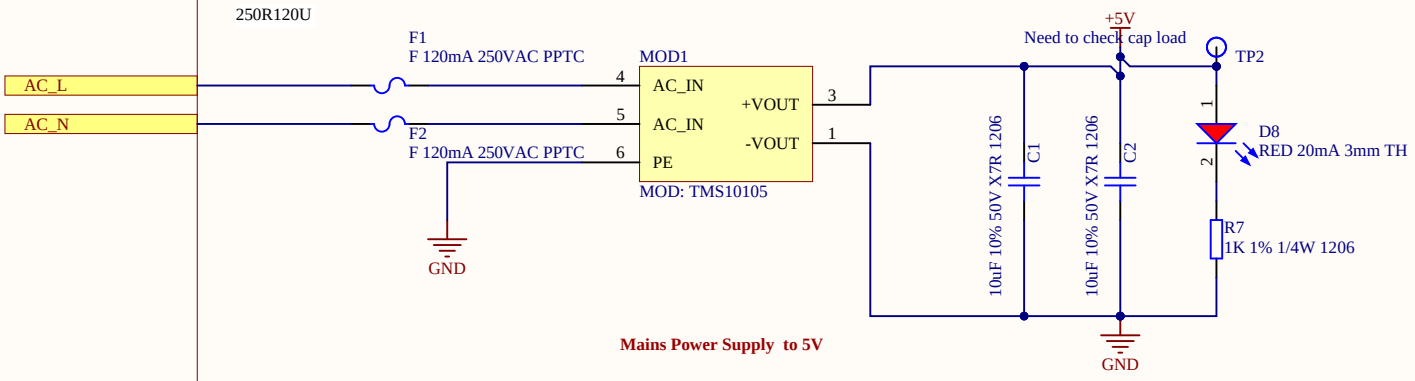

Mains Power Supply to 5V

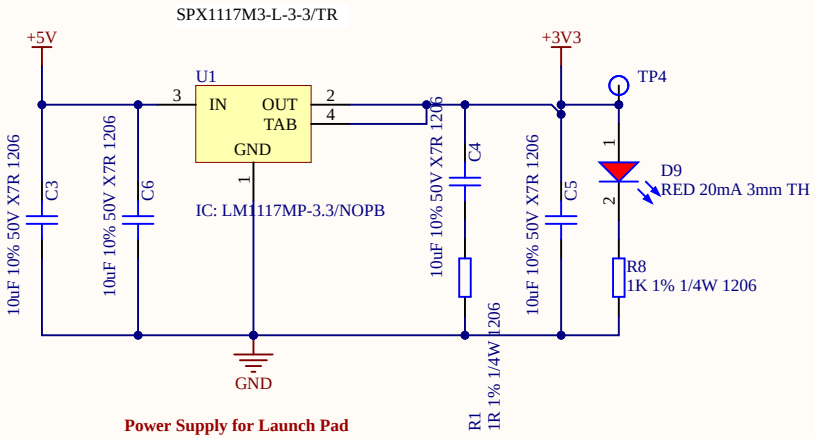

Power Supply for Launch Pad

Title		
Size A4	Number	Revision
Date: 3-24-2026		Sheet of
File: C:\Users\..\Power.SchDoc		Drawn By:

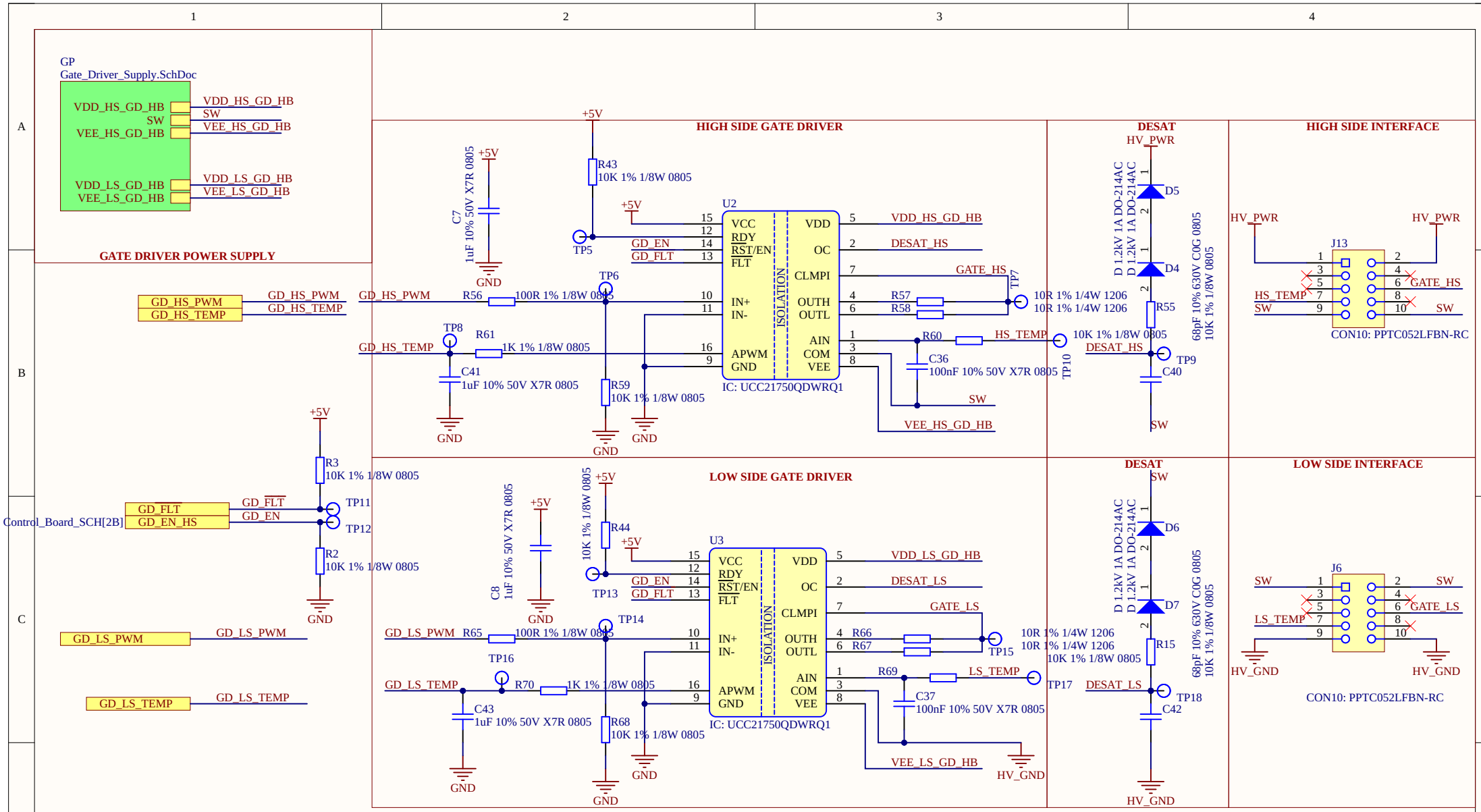

Title		
Size A4	Number	Revision
Date: 3-24-2026		Sheet of
File: C:\Users\..\Gate_Driver.SchDoc		Drawn By:

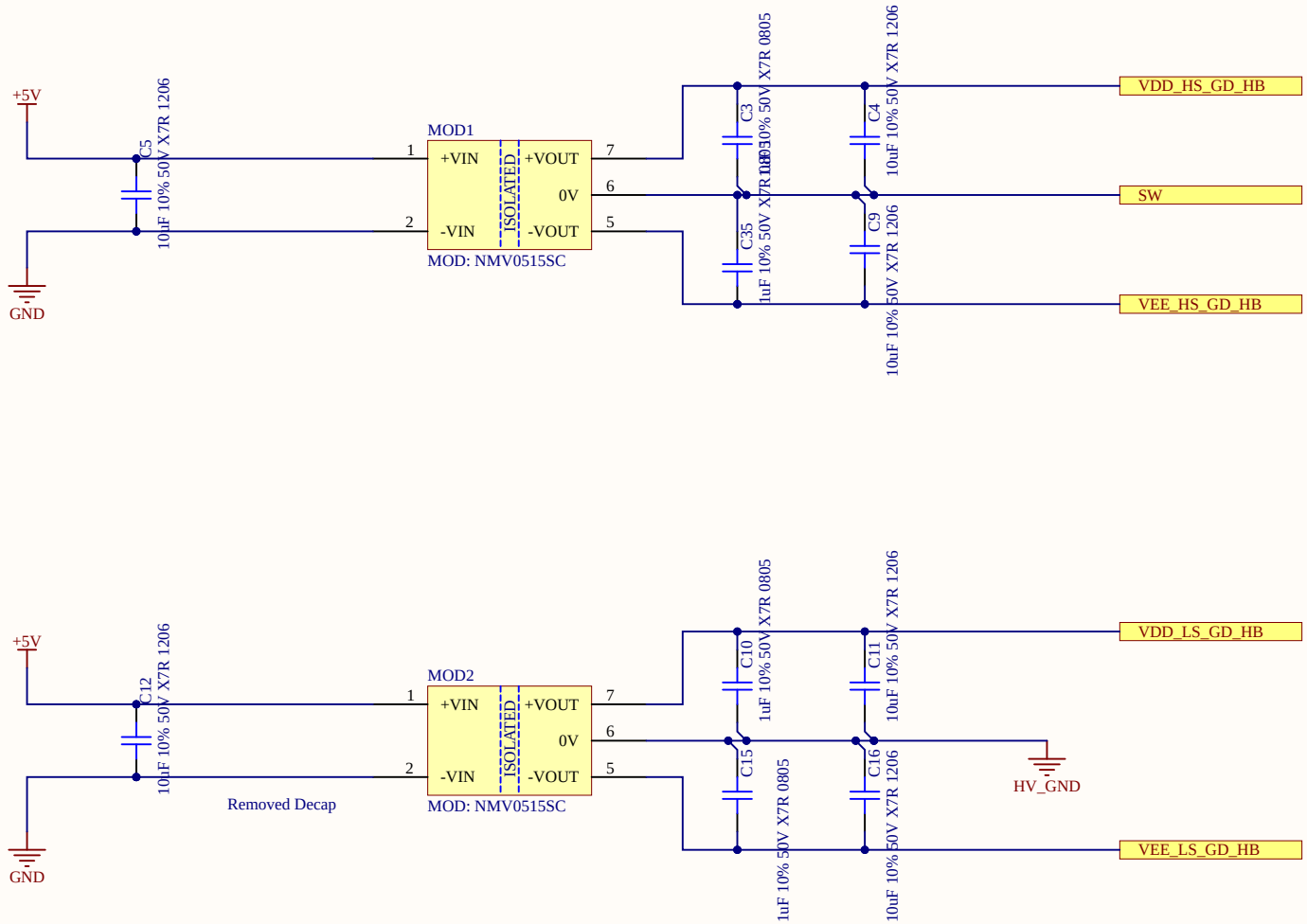

Title		
Size A4	Number	Revision
Date: 3-24-2026		Sheet of
File: C:\Users\..\Gate_Driver_Supply.SchDoc		Drawn By:

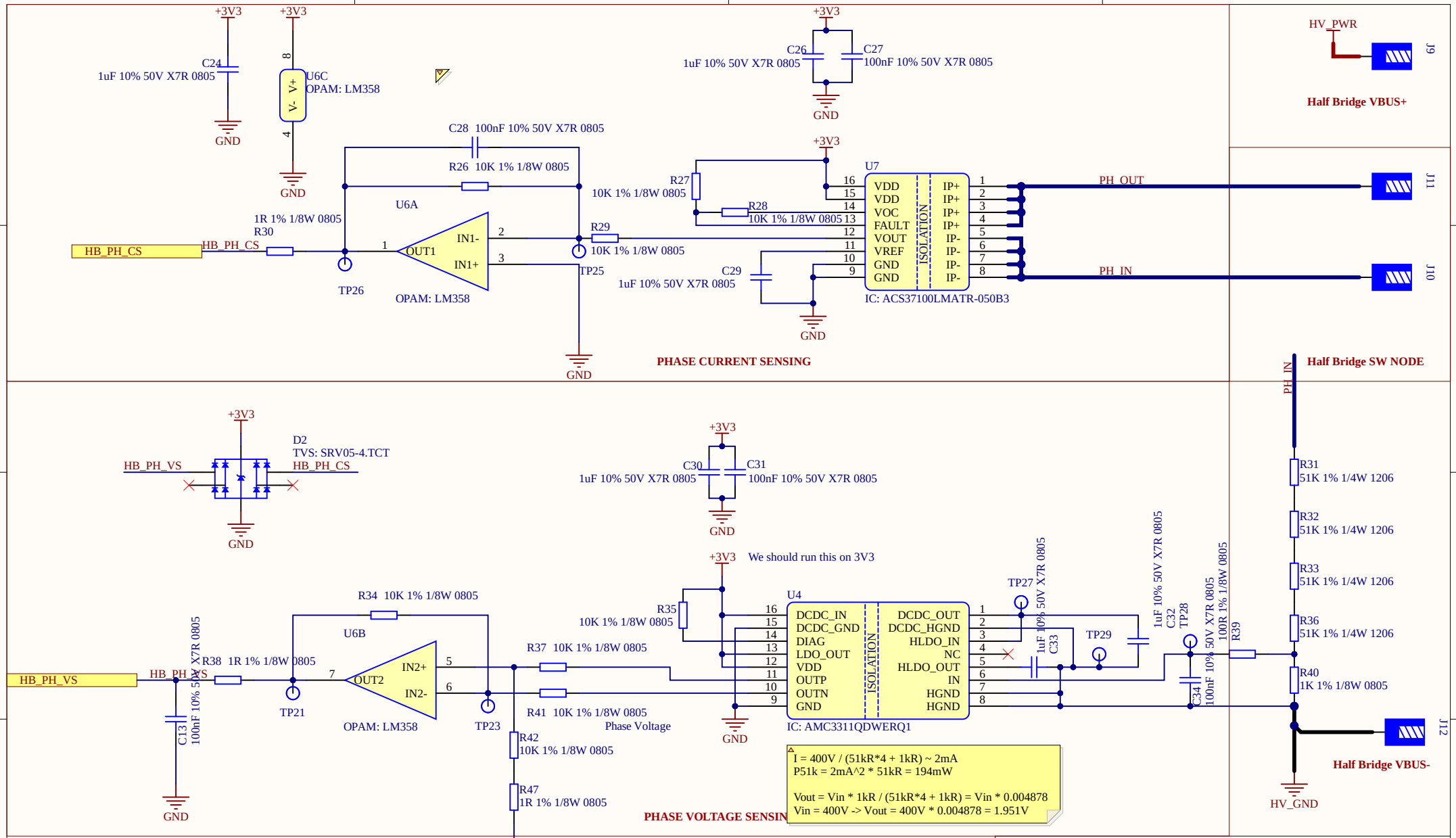

Title		
Size A4	Number	Revision
Date: 3-24-2026		Sheet of
File: C:\Users\..\HB_SENSING.SchDoc		Drawn By:

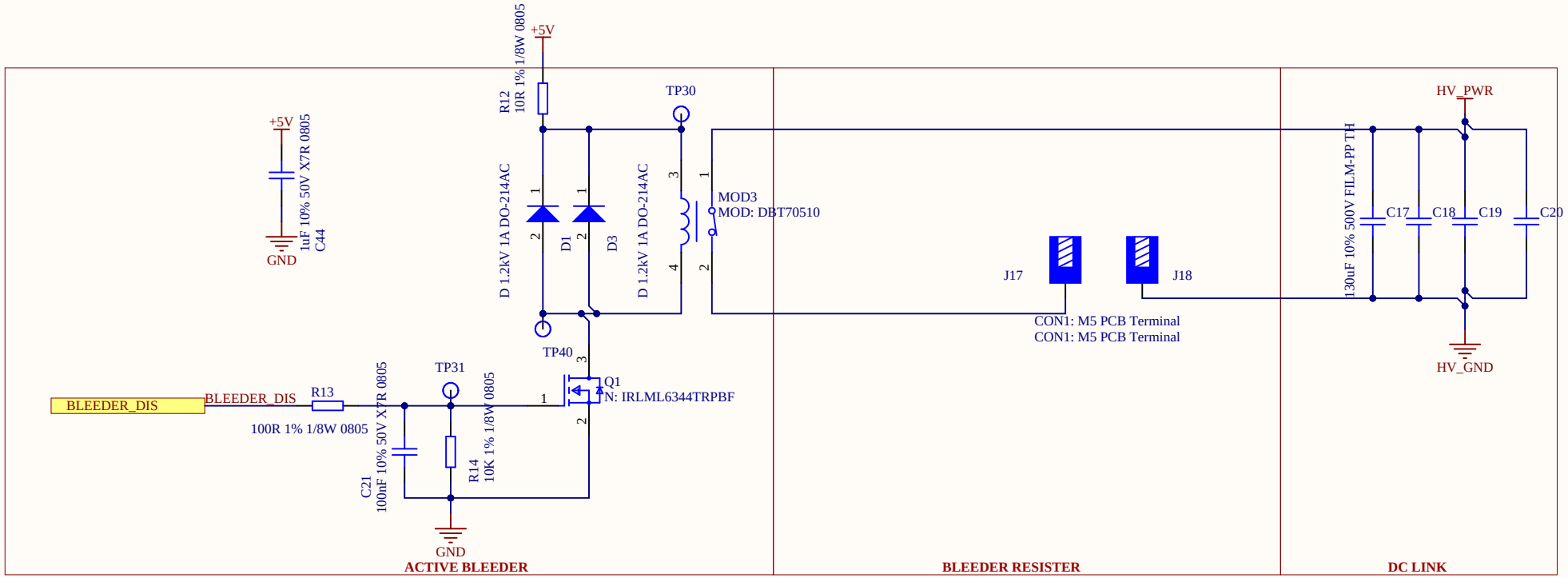

Title		
Size A4	Number	Revision
Date: 3-24-2026		Sheet of
File: C:\Users\..\DC_Link.SchDoc		Drawn By:

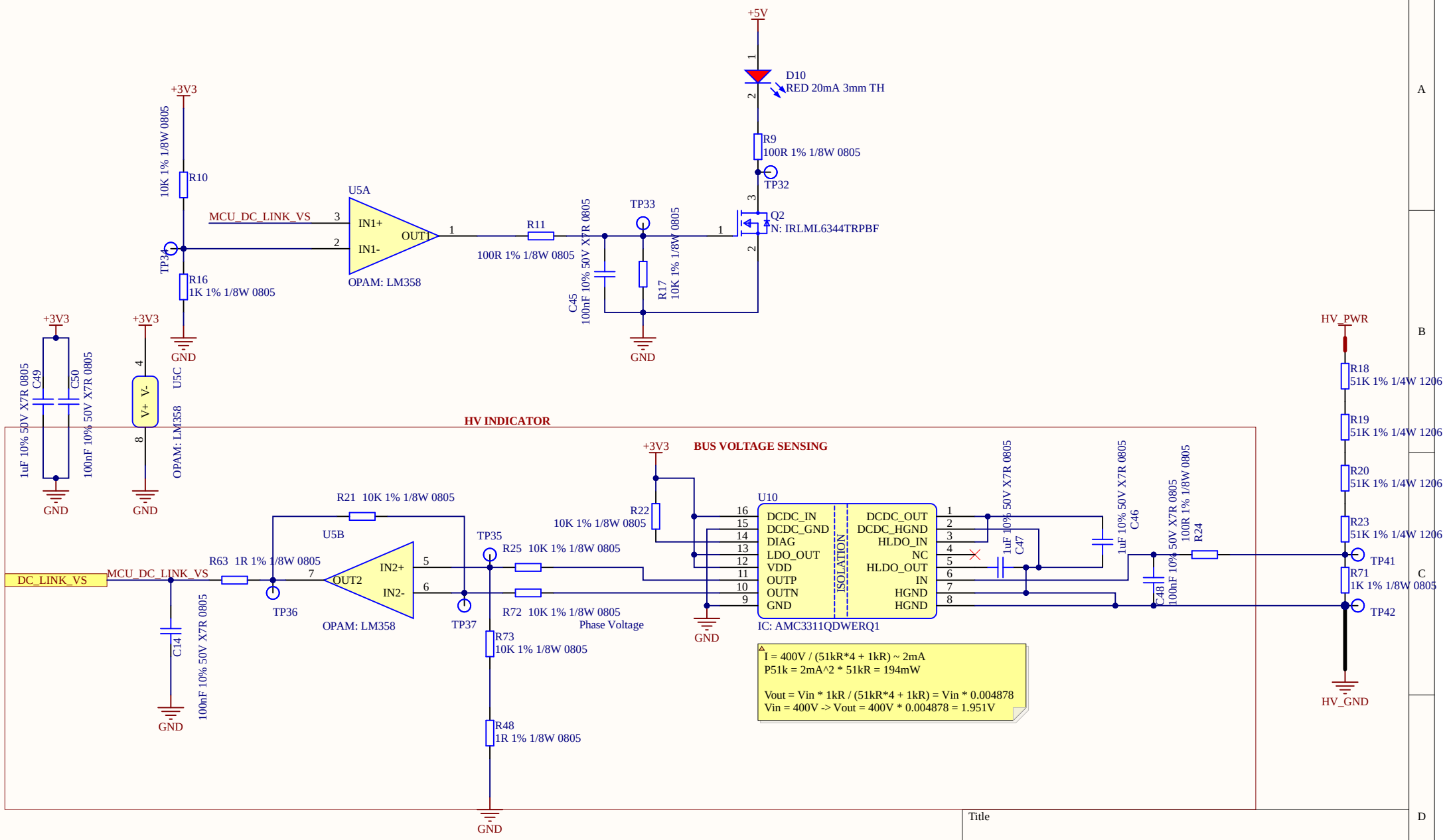

Title		
Size A4	Number	Revision
Date: 3-24-2026		Sheet of
File: C:\Users\..\DC_Link_Sensing.SchDoc		Drawn By: