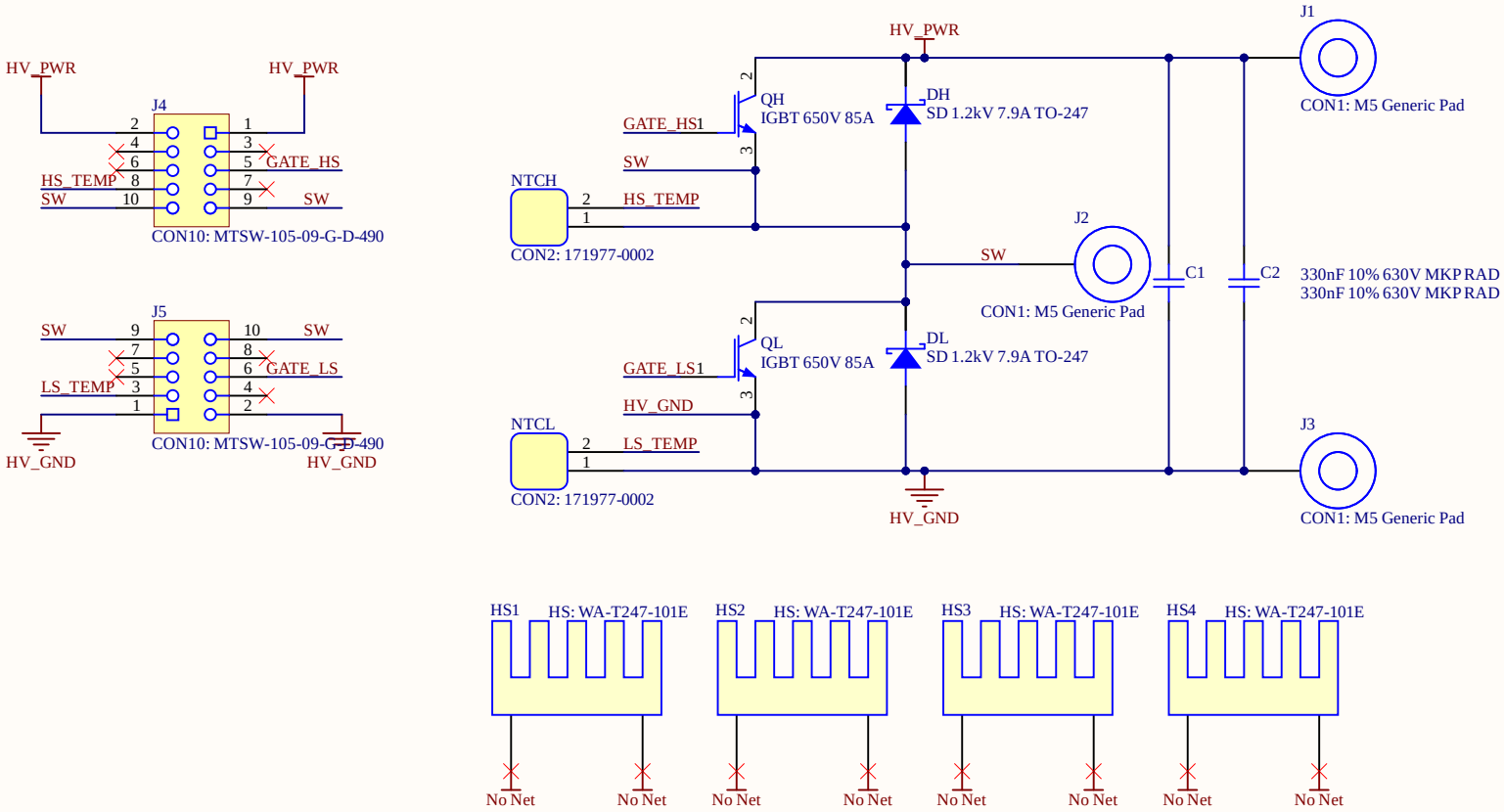

Title		
Size A4	Number	Revision
Date: 3/08/2026		Sheet of
File: D:\Repos\..\half-bridge.SchDoc		Drawn By:

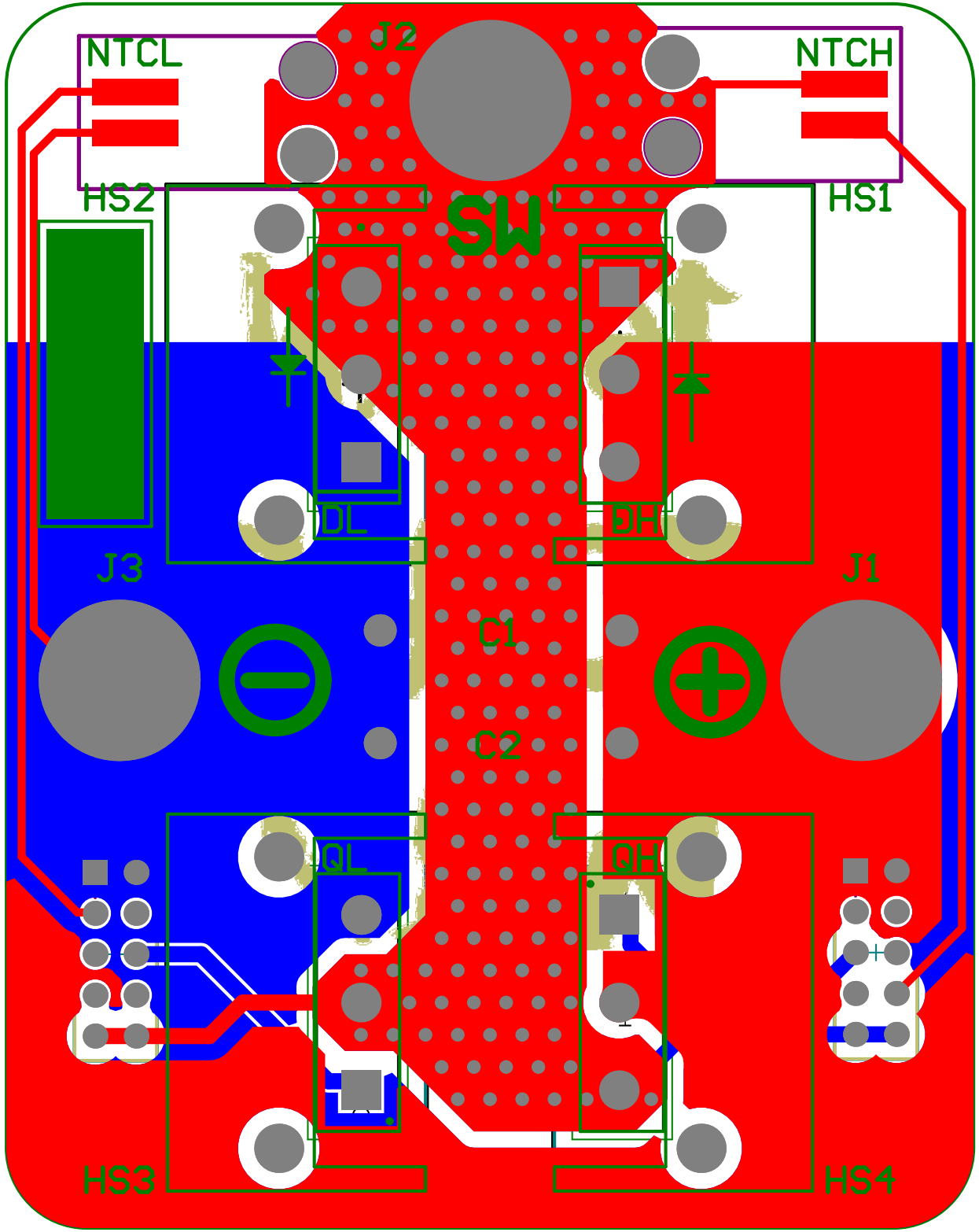
NTCL
J2
NTCH
HS2
SW
HS1
DL
DH
J3
J1
C1
C2
QL
QH
HS3
HS4