Communications Lab 2
AM Simulation and USRP

Your Name

March 7, 2026

Contents

1 Introduction **2**

2 Theory **2**
2.1 Amplitude Modulation Fundamentals 2
2.2 Spectral Characteristics of AM 2
2.3 Coherent Demodulation Theory 3
2.4 Envelope Detection Theory 3
2.5 Rectification Loss and Amplitude Scaling 4
2.6 Role of Low-Pass Filtering 4
2.7 Noise Effects in AM Systems 5

3 Exercise 1a: Coherent Demodulation **5**

4 Exercise 1b: Envelope Detection **6**

5 Exercise 2: AM Simulation **7**

6 Exercise 3: AM Communications via USRP **10**

1 Introduction

This laboratory investigates amplitude modulation (AM) and demodulation techniques, including coherent detection and envelope detection. Simulation is performed in LabVIEW, followed by practical transmission using a USRP platform.

2 Theory

This section summarizes the signal theory needed for amplitude modulation (AM) and its demodulation methods.

2.1 Amplitude Modulation Fundamentals

For standard AM with a large carrier (DSB-LC), the transmitted signal is

$$s(t) = [A_c + A_m\, m(t)] \cos(2\pi f_c t), \tag{1}$$

where $m(t)$ is the baseband message (typically normalized so that $|m(t)| \leq 1$).

For a single-tone message,

$$m(t) = \cos(2\pi f_m t), \tag{2}$$

so

$$s(t) = [A_c + A_m \cos(2\pi f_m t)] \cos(2\pi f_c t). \tag{3}$$

The parameters are:

- A_c: carrier amplitude,
- A_m: message scaling amplitude,
- f_c: carrier frequency,
- f_m: message frequency (single-tone case).

The modulation index is

$$\mu = \frac{A_m}{A_c}. \tag{4}$$

AM works by placing the message in the *envelope* of a high-frequency carrier:

$$e(t) = A_c + A_m\, m(t) = A_c\,[1 + \mu\, m(t)]\,. \tag{5}$$

In DSB-LC, the carrier term is deliberately transmitted, which enables simple envelope detection.

2.2 Spectral Characteristics of AM

Let $M(f)$ be the Fourier transform of $m(t)$. From (1),

$$S(f) = \frac{A_c}{2}[\delta(f - f_c) + \delta(f + f_c)] + \frac{A_m}{2}[M(f - f_c) + M(f + f_c)]\,. \tag{6}$$

This shows two effects:

- a carrier line at $\pm f_c$,
- shifted copies of baseband spectrum around $\pm f_c$ (frequency translation).

For $m(t) = \cos(2\pi f_m t)$, the sidebands are at

$$f_c - f_m \quad \text{and} \quad f_c + f_m. \tag{7}$$

Hence the AM bandwidth is

$$B = 2f_m \tag{8}$$

for single-tone modulation, and more generally

$$B = 2B_m, \tag{9}$$

where B_m is the message bandwidth.

2.3 Coherent Demodulation Theory

Coherent (synchronous) demodulation multiplies the received AM signal by a local carrier:

$$y(t) = s(t)\cos(2\pi f_c t + \phi), \tag{10}$$

where ϕ is the receiver phase error.

Using $\cos\alpha\cos\beta = \frac{1}{2}[\cos(\alpha-\beta) + \cos(\alpha+\beta)]$,

$$y(t) = \frac{1}{2}\left[A_c + A_m m(t)\right]\cos\phi + \frac{1}{2}\left[A_c + A_m m(t)\right]\cos(4\pi f_c t + \phi). \tag{11}$$

Therefore:

- the first term is the desired baseband term,
- the second term is centered around $2f_c$ and must be removed.

After low-pass filtering:

$$y_{\text{LPF}}(t) = \frac{1}{2}\left[A_c + A_m m(t)\right]\cos\phi. \tag{12}$$

Three key consequences follow directly from (12):

- **Why low-pass filter?** To reject the $2f_c$ mixing product.
- **Why remove DC?** The term $\frac{1}{2}A_c\cos\phi$ is a DC offset.
- **Why scale amplitude?** The message is attenuated by $\frac{1}{2}\cos\phi$ (and any LO gain factors), so a gain correction is needed.

Coherence is critical: if $\phi \neq 0$, the output is reduced by $\cos\phi$; if frequency is mismatched, an additional time-varying term appears and the recovered baseband is distorted.

2.4 Envelope Detection Theory

Envelope detection is a nonlinear alternative to coherent detection. Conceptually it consists of:

1. rectification,
2. low-pass filtering,
3. DC removal.

For correct operation, the envelope must not invert. With $|m(t)| \leq 1$:

$$e_{\min} = A_c - A_m = A_c(1 - \mu), \tag{13}$$

so the no-inversion condition is

$$\mu \leq 1. \tag{14}$$

If $\mu > 1$, envelope inversion (over-modulation) occurs, and the rectified/filtered signal no longer tracks the original message linearly.

Compared with coherent detection:

- coherent detection is linear (with a synchronized carrier) and more accurate,
- envelope detection is simpler but approximate and more sensitive to amplitude impairments.

2.5 Rectification Loss and Amplitude Scaling

Rectification is nonlinear, so there is no single impulse response that applies to all inputs. A useful approximation (also the intuition used in the handout Appendix B) is to model half-wave rectification as multiplication by a periodic gating waveform $q(t)$ that keeps positive carrier half-cycles and suppresses negative ones.

For a 50% duty-cycle gate synchronized to the carrier:

$$q(t) = \frac{1}{2} + \frac{2}{\pi}\left[\cos(\omega_c t) + \frac{1}{3}\cos(3\omega_c t) + \frac{1}{5}\cos(5\omega_c t) + \cdots\right]. \tag{15}$$

Multiplying $s(t)$ by $q(t)$ creates many frequency components. After low-pass filtering, the recovered envelope term is attenuated by an approximately constant factor, commonly expressed as

$$\hat{e}(t) \approx \frac{1}{\pi}\left[A_c + A_m m(t)\right]. \tag{16}$$

This explains the practical π scaling compensation: multiplying by π (before or after rectification, depending on implementation) restores the expected amplitude. The exact factor depends on the exact rectifier model, but the π correction captures the dominant loss mechanism.

2.6 Role of Low-Pass Filtering

Low-pass filtering is essential in both demodulators:

- **Coherent detection:** remove terms around $2f_c$ and keep baseband.
- **Envelope detection:** smooth rectifier ripple/harmonics and retain envelope variation.

Cutoff selection rule:

$$f_{\mathrm{LP}} \gtrsim B_m \quad \text{and} \quad f_{\mathrm{LP}} \ll f_c. \tag{17}$$

So the message passes with low distortion while carrier-related components are rejected.

Filter-order tradeoff:

- higher order gives stronger stopband rejection,
- but increases phase delay/transient settling.

Butterworth filters are widely used because their passband is maximally flat (no ripple), which helps preserve message amplitude in-band.

2.7 Noise Effects in AM Systems

Noise affects AM demodulators differently:

- **Envelope detection:** directly tracks amplitude, so amplitude noise appears strongly in the output.
- **Coherent detection:** generally more robust because synchronized mixing and LPF provide better selectivity against out-of-band components.

The recovered message amplitude grows with A_m (hence with μ), so at very small μ the desired baseband can be visually dominated by noise. Increasing μ improves message visibility up to the over-modulation limit $\mu \leq 1$ for envelope detection.

Increasing receiver gain raises both desired signal and noise/interference. In practice this can make weaker disturbances visible in time and frequency plots, even when the intended AM signal is still present.

3 Exercise 1a: Coherent Demodulation

Objective

Implement a coherent AM demodulator that recovers the baseband message in time and frequency domains.

Module Design

The coherent demodulation sub-VI is shown in Figure 1.

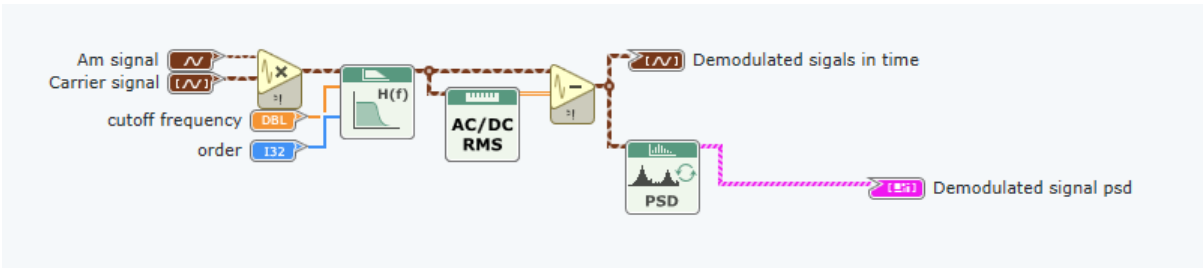

Figure 1: Block diagram of the coherent demodulation VI.

The implemented processing chain is:

1. Multiply the AM input signal by a local carrier at the same carrier frequency.
2. Apply a Butterworth low-pass filter (order and cutoff are exposed as controls).
3. Estimate the DC component and subtract it from the filtered waveform.
4. Display the recovered message in time domain and as a PSD estimate.

Link to Theory

From coherent detection theory (Section 2), after multiplication and low-pass filtering,

$$y_{\mathrm{LPF}}(t) = \frac{1}{2}\left[A_c + A_m m(t)\right]\cos\phi, \tag{18}$$

which includes:

- the desired baseband term proportional to $m(t)$,
- a DC component proportional to A_c.

This directly explains why the VI needs both low-pass filtering and DC removal.

Why Low-Pass Filter, DC Removal, and Scaling Are Needed

- **Low-pass filter:** removes components near $2f_c$ produced by the product detector.
- **DC removal:** removes the carrier-dependent offset so the output is centered around zero.
- **Amplitude scaling:** the demodulated message is attenuated (ideal factor $\approx 1/2$), so gain correction is required to match the original message amplitude.

Expected Output

With correct carrier synchronization, the demodulated waveform is a sinusoid at f_m, and the demodulated PSD shows a dominant peak at the message frequency.

4 Exercise 1b: Envelope Detection

Objective

Implement an envelope detector using rectification and low-pass filtering, then compare it with coherent detection.

Module Design

The envelope detection sub-VI is shown in Figure 2.

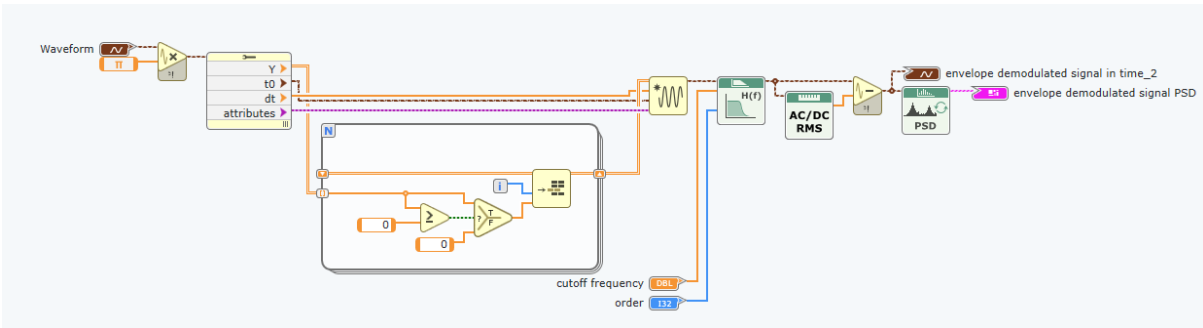

Figure 2: Block diagram of the envelope detection VI.

The implemented signal flow is:

1. Apply a pre-gain of π to compensate rectification loss.
2. Convert waveform data to array form.
3. Perform half-wave rectification (negative samples set to zero) in a loop.
4. Rebuild the waveform while preserving timing information (t_0 and dt).
5. Apply a Butterworth low-pass filter.
6. Remove the DC component and estimate the PSD of the recovered signal.

Link to Theory

Envelope detection is a nonlinear approximation to message recovery. It works by extracting slow envelope variation and rejecting carrier ripple through low-pass filtering. The method is valid when the envelope does not invert, i.e.

$$\mu \leq 1. \tag{19}$$

For $\mu > 1$, over-modulation causes envelope inversion and strong distortion in the recovered signal.

The π pre-gain compensates the dominant amplitude loss introduced by half-wave rectification, consistent with the rectification-loss analysis in the handout appendix.

Implementation Notes

- Preserving waveform timing during array conversion/rebuild is essential; otherwise the recovered frequency axis becomes incorrect.
- The same low-pass design logic as coherent detection is used: pass message bandwidth, reject carrier-related components.
- DC removal is required because the detected envelope contains a large mean term linked to the carrier.

Expected Output

For $\mu \leq 1$, the time-domain output tracks the message envelope and PSD shows the message component near f_m. As μ exceeds 1, visible distortion appears even after filtering.

5 Exercise 2: AM Simulation

Objective

Integrate the AM modulator and both demodulation sub-VIs in a single top-level simulation and compare coherent versus envelope detection as the modulation index changes.

Top-Level Design

The top-level AM simulation VI is shown in Figure 3.

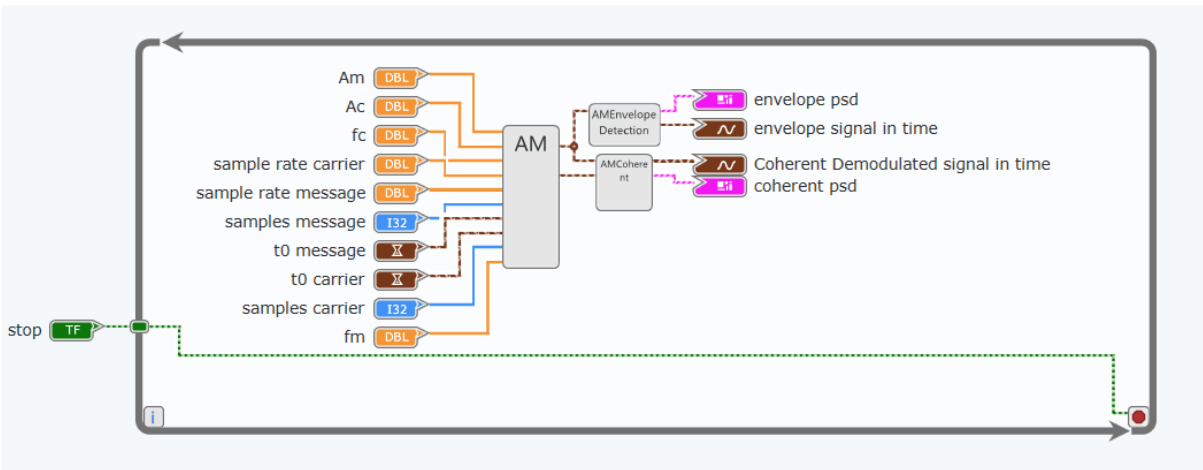

Figure 3: Top-level AM simulation VI connecting modulation, coherent demodulation, and envelope detection.

The top-level VI:

- generates an AM waveform from message and carrier parameters,
- passes the AM signal to both demodulators in parallel,
- displays time-domain and PSD outputs for direct comparison,
- runs inside a while loop so parameter changes are observed in real time.

Parameter Set Used

To match the handout setup, the simulation is configured with:

- carrier amplitude $A_c = 2$,
- message amplitude $A_m \in \{1, 2, 3, 4\}$,
- sample frequency $f_s = 200$ kHz,
- number of samples $N = 1000$,
- carrier frequency $f_c = 10$ kHz,
- message frequency $f_m = 1$ kHz,
- Butterworth LPF order = 5, cutoff = 3 kHz.

The corresponding modulation indices are

$$\mu = \frac{A_m}{A_c} \in \{0.5, 1.0, 1.5, 2.0\}. \tag{20}$$

Results for $A_m = 1, 2, 3, 4$

Figures 4a–4d show the top-level outputs after increasing message amplitude from 1 to 4.

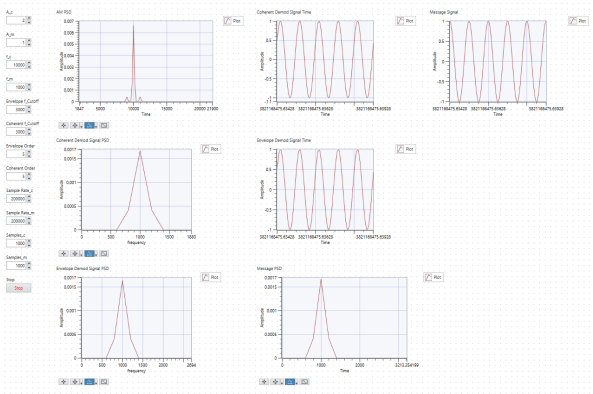

(a) $A_m = 1$ ($\mu = 0.5$)

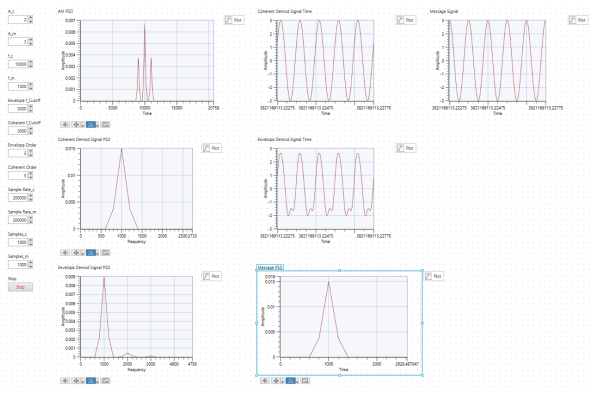

(b) $A_m = 2$ ($\mu = 1.0$)

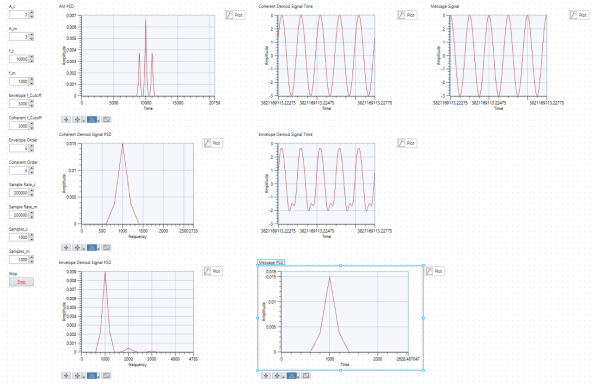

(c) $A_m = 3$ ($\mu = 1.5$)

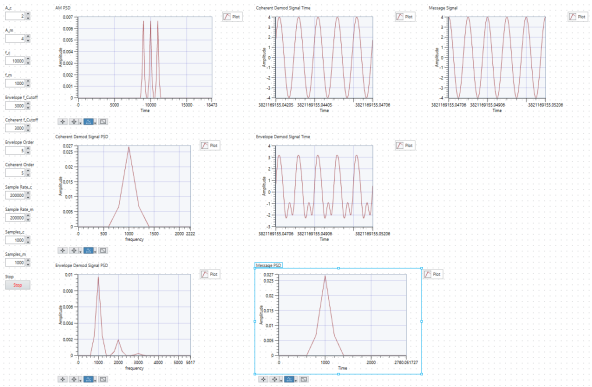

(d) $A_m = 4$ ($\mu = 2.0$)

Figure 4: Demodulated outputs for increasing message amplitude. Each image shows coherent and envelope time/PSD plots.

What Changes Between the Two Demodulation Techniques? Why?

As A_m increases by 1, the coherent demodulated sinusoid amplitude increases by approximately 0.5. This matches coherent detection scaling:

$$y_{\text{LPF}}(t) \approx \frac{1}{2}\left[A_c + A_m \cos(2\pi f_m t)\right] \tag{21}$$

for synchronized carrier recovery. Therefore, the recovered AC term is proportional to $A_m/2$.

The key difference in waveform shape is:

- **Coherent demodulation** preserves the signed baseband waveform (positive and negative excursions) after DC removal.
- **Envelope detection** mainly preserves amplitude variation (magnitude of the envelope), so the recovered waveform is unipolar/positive-biased.

As message amplitude increases, both outputs show larger variation, but envelope detection is constrained by the no-inversion condition $\mu \leq 1$. For $\mu > 1$ (cases $A_m = 3, 4$ with $A_c = 2$), over-modulation can introduce distortion because rectification cannot recover sign information once the envelope inverts.

6 Exercise 3: AM Communications via USRP

Task 1: Functional Understanding of Tx and Rx Modules

The first task is to explain how the provided USRP transmitter and receiver modules operate from their block diagrams.

USRP Transmitter (TX) Module

Figure 5 shows the TX VI.

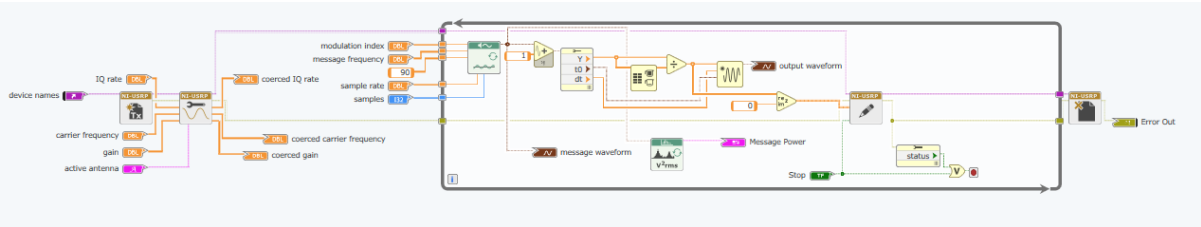

Figure 5: USRP AM transmitter VI block diagram.

Functionally, the TX VI performs the following steps:

1. Opens a TX session to the selected device.
2. Configures radio parameters (IQ rate, carrier frequency, gain, active antenna), and reports coerced values.
3. Inside a while loop, generates the message waveform from the set message frequency, sample rate, and sample count.
4. Applies the modulation index to form the AM baseband signal and prepares complex IQ samples (real path carrying the AM waveform).
5. Streams data continuously using `niUSRP Write Tx Data`, so the USRP upconverts and transmits at the configured RF carrier.
6. Stops cleanly and closes the session when the stop control is pressed.

USRP Receiver (RX) Module

Figure 6 shows the RX VI.

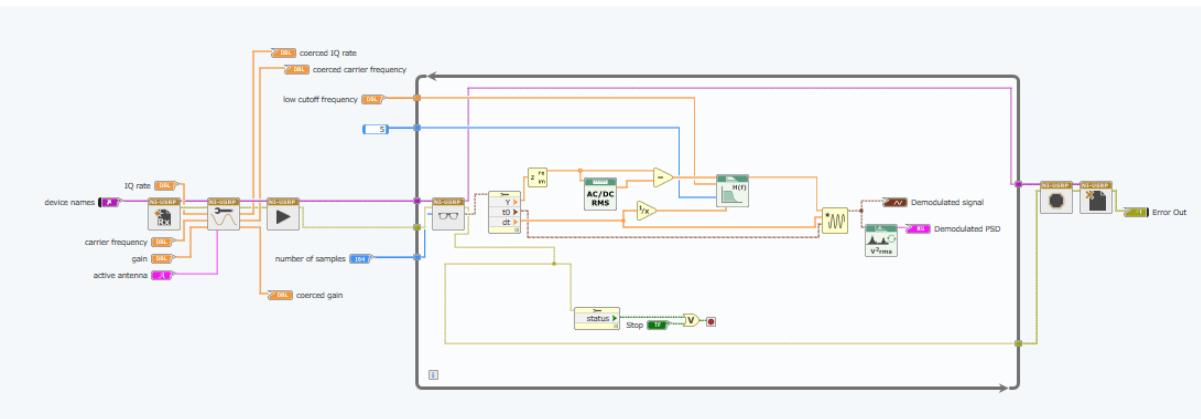

Figure 6: USRP AM receiver VI block diagram.

Functionally, the RX VI performs:

1. Opens an RX session and configures IQ rate, carrier frequency, gain, and active antenna.
2. Initiates reception and enters a while loop to fetch blocks of received samples.
3. Uses `niUSRP Fetch Rx Data` to get baseband data from the USRP.
4. Applies baseband post-processing in the VI: low-pass filtering, DC removal, and amplitude handling, then computes PSD.
5. Displays demodulated signal (time domain) and demodulated PSD (frequency domain).
6. Aborts acquisition and closes the session cleanly on stop.

How TX and RX Work Together

The TX module provides the USRP with baseband IQ data that represent the AM signal; the USRP hardware performs RF transmission. At the receiver, the USRP returns baseband data centered on the configured carrier, and the RX VI finalizes message recovery with filtering/offset removal and visualization. This is why the modules are mainly configuration, streaming, and baseband-processing pipelines rather than full RF implementations in LabVIEW code.

Task 2: Single-Tone Transmission and Recovery

For Task 2, the transmitter is configured to send a single-tone AM message and the receiver output is observed in both time and frequency domains.

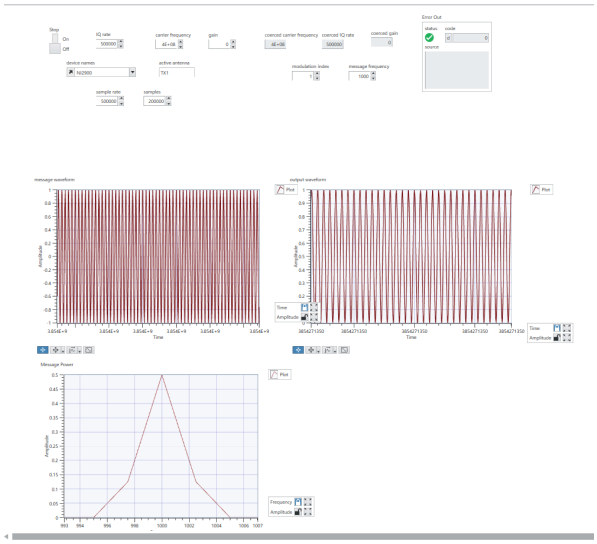

(a) USRP TX panel during single-tone transmission.

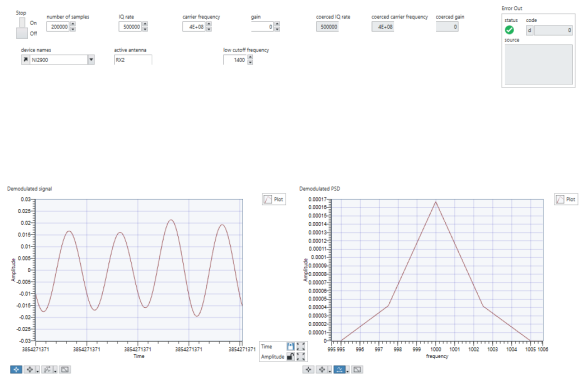

(b) USRP RX panel showing demodulated signal and PSD.

Figure 7: Exercise 3 Task 2 capture (transmission and reception).

Observed result:

- The demodulated time-domain waveform is sinusoidal, confirming successful AM message recovery.
- The demodulated PSD shows a dominant single peak at the message frequency (in the provided capture, near 1 kHz).

This confirms that the TX/RX chain is operating correctly: the transmitter sends an AM-modulated tone and the receiver recovers the baseband message.

Task 3: Noise Effect Versus Modulation Index

To study noise sensitivity, receiver gain was increased and the modulation index was varied. The captured results for $\mu = 1$, $\mu = 0.5$, and $\mu = 0.2$ are shown in Figure 8.

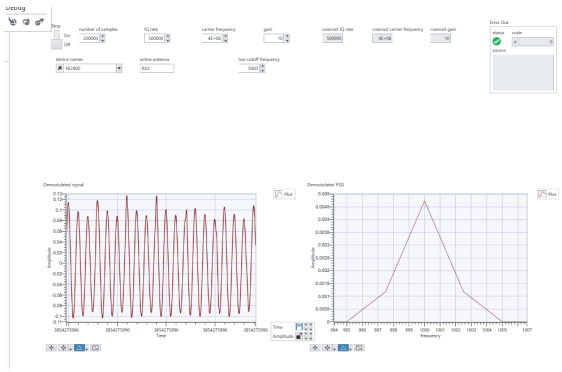

(a) $\mu = 1$

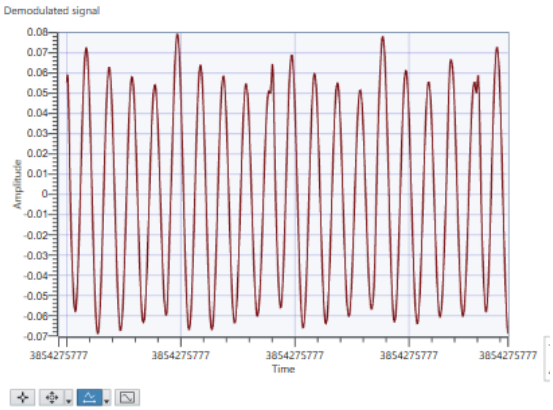

(b) $\mu = 0.5$

figures/ex3_task3_mu_02.png

(c) $\mu = 0.2$

Figure 8: Exercise 3 Task 3: demodulated signal under increased receiver gain for different modulation indices.

What changes as μ decreases?

- At $\mu = 1$, the recovered sinusoid is strongest relative to noise and appears the cleanest.

- At $\mu = 0.5$, the desired signal amplitude is lower, so fluctuations/noise become more visible.
- At $\mu = 0.2$, the message is weakest and noise is clearly noticeable, with visible irregular perturbations in the waveform.

Why this happens: the demodulated message component scales with modulation index, so reducing μ reduces recovered signal amplitude while receiver noise/interference does not reduce proportionally. Therefore, output SNR decreases as μ decreases.

Conclusion for Task 3: in these results, noise becomes clearly noticeable from approximately $\mu \approx 0.2$ (and starts to become apparent already near $\mu = 0.5$).